Submittal Package

Viega PureFlow® Press Fittings

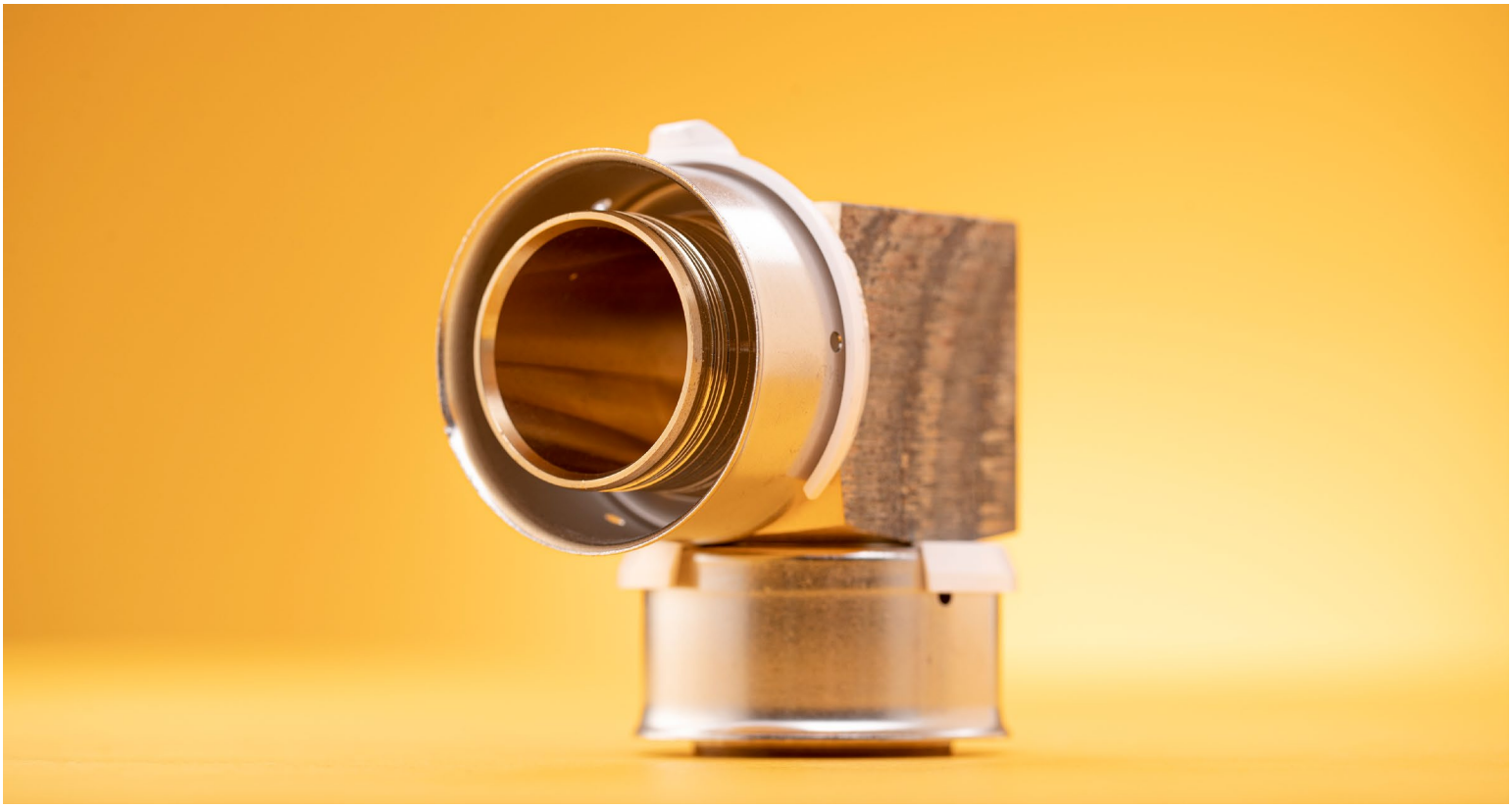

Project _____ **Date** _____

Engineer _____ **Contractor** _____

Submitted by _____

Approved by _____ **Date** _____ **Approved by** _____ **Date** _____

Table of Contents

- ☐ Chilled Water
- ☐ Hydronic Heating
- ☐ Fire Protection
- ☐ Low-Pressure Steam
- ☐ Compressed Air
- ☐ Industrial Gases
- ☐ Vacuum
- ☐ _____
- ☐ _____
- ☐ _____
- ☐ _____
- ☐ _____

1 **System Data Sheet** ____ **3**
PureFlow Press Fittings ____ 3

2 **Tech Data Sheet** ____ **4**
PureFlow Fire Rated Outlet Boxes ____ 4

3 **Product Instructions** ____ **5**
PureFlow Press Connections ____ 5
PureFlow Press Connections ____ 5

4 **Engineering Specifications** ____ **6**
PureFlow System ____ 6

5 **Dimensional Documents** ____ **10**
PureFlow Press Fittings ____ 10
PureFlow Press Polymer Fittings ____ 24

6 **Limited Warranty – Viega Plastic Systems** ____ **28**

This document is subject to updates. For the most current Viega technical literature, please visit www.viega.us.

Viega products are designed to be installed by licensed and trained plumbing and mechanical professionals who are familiar with Viega products and their installation. **Installation by non-professionals may void Viega LLC's warranty.**

Zero Lead identifies Viega products meeting the lead free requirements of NSF/ANSI/CAN 61 through testing under NSF/ANSI/CAN 372 (0.25% or less maximum weighted average lead content).

1 System Data Sheet

PureFlow Press Fittings

Viega PureFlow Press fittings are available in zero lead bronze and polymer and include a factory-assembled, stainless steel sleeve with three viewing holes and a tool locator ring to ensure a proper PEX press connection. Viega PureFlow Press is the most complete potable water and hydronic system solution available in North American.

PureFlow Press fittings are available in sizes ranging from 5⁄16" to 2" in elbows, tees, adapters, couplings, polymer manifolds, and valves. The 5⁄16" and 5⁄8" bronze fittings are not zero lead and are for use in radiant systems only.

Components

- Zero lead bronze fittings use high quality zero lead material
- Polymer fittings use high-grade polymer (polyphenylsulfone)
- Stainless steel press sleeves are 304 stainless steel

Operating Parameters

- Operating Temperature: 180°F max (potable)
  200°F max (hydronic)
- Operating Pressure: 160 psi max at 73°
  100 psi max at 180°F
- Test Pressure: Recommended: 100 psi, Maximum: 160 psi

Listings and Certifications

- ASTM E84
- ASTM F3347
- ASTM F3348
- CAN/ULC S101 / S102.2
- CSA B137.5
- HUD MR-1276
- ICC-ES PMG 1038/1015
- NSF-pw 372
- UL 263

Compliant With

- International Mechanical Code (IMC)
- International Plumbing Code (IPC)
- International Residential Code (IRC)
- National Standard Plumbing Code (NSPC)
- Uniform Mechanical Code (UMC)
- Uniform Plumbing Code (UPC)
- Housing for Urban Development (HUD)
- Canadian Standards Association (CSA)
- National Plumbing Code of Canada (NPCC)
- National Building Code of Canada (NBCC)

Approved Applications

- Hot and cold potable water
- Rainwater/gray water
- Hydronic heating and cooling*

**Viega Barrier PEX tubing only.*

For more specific information on applications for PureFlow systems, contact Viega Technical Services at 1-800-976-9819.

Viega's PureFlow systems meet or exceed all requirements of ASTM F876/877 and are approved for installations above and below ground.

Recommended Tools

- Compact-size press tools (minimum hydraulic ram output of 5,400 lbs.) can be used to press 5⁄16" to 1½"
- Standard press tools (minimum hydraulic ram output of 7,200 lbs.) can be used to press ½" to 2"
- Hand tools (5⁄16" to 1")

Smart Connect® Technology

Viega PureFlow Press fittings are manufactured with Viega's unique Smart Connect technology. Designed into the fitting itself, Viega Smart Connect technology allows identification of an unpressed fitting during pressure testing.

2 Tech Data Sheet

PureFlow Fire Rated Outlet Boxes

Description

This specification designates operating parameters, material characteristics, and listings of Viega Fire Rated Outlet Boxes. Models include ice maker and washing machine outlet boxes, with and without water hammer arrestors. All models include a ½" press connection, to be completed with the aid of a PureFlow Press hand tool or power press tool.

Materials

The body of the outlet box is constructed from fire resistant PVC with a factory-installed ¼" intumescent pad. The valve is made from Eco Brass®, a zero lead brass alloy that is corrosion and dezincification resistant. References to zero lead indicate that products meet the requirements of both NSF/ANSI Standard 372 and NSF/ANSI 61.

Operating Parameters

- Temperature range: 0°F - 180°F
- Max Operating Pressure: 160 psi

Listings and Certifications

- CSA listed to NSF/ANSI/CAN 61-372
- ASTM F877
- ASME A112.18.1/CSA B125.1
- Warnock Hersey listed 1hr and 2hr:
  - ASTM E814
  - CAN/ULC S115
  - IAPMO UPC

Recommended Uses

Outlet boxes, depending on the model, are intended as connection points to either washing machines or ice makers. They are intended for use in hot and cold potable water distribution systems in single and multifamily dwellings, as well as multiple-unit structures (apartments, condos, hotels, motels, etc.).

3 Product Instructions

PureFlow Press Connections

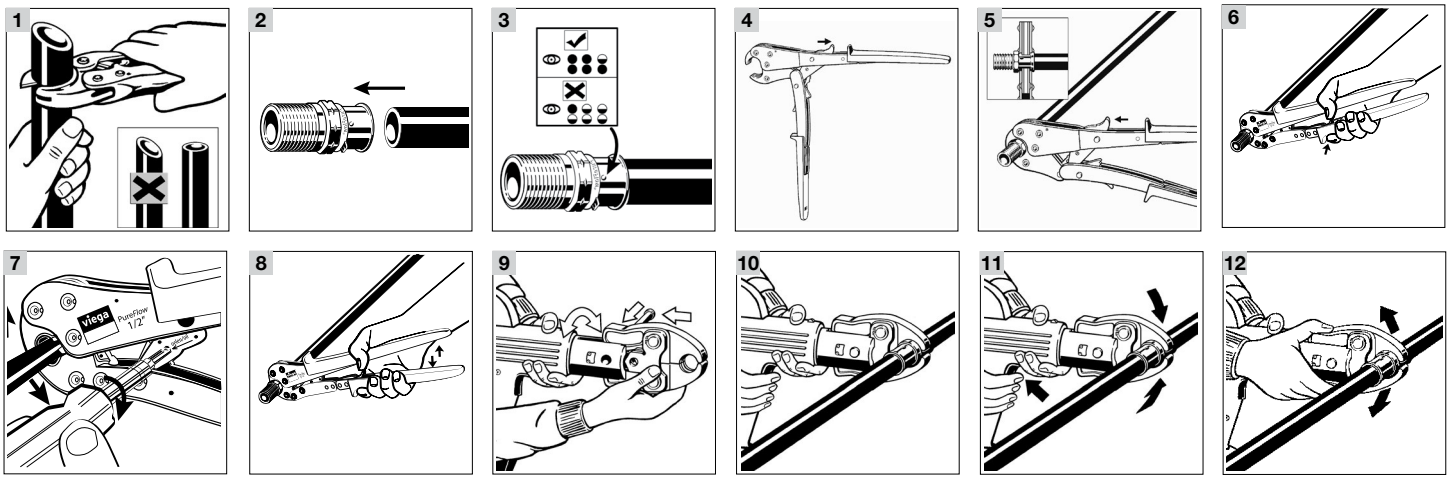

Viega PureFlow Press Fittings

DANGER!
Read and understand all instructions for installing PureFlow Press fittings. Failure to follow all instructions may result in extensive property damage, serious injury, or death.

1 Square off tubing to proper length. Uneven, jagged, or irregular cuts will produce unsatisfactory connections.

2 Insert PureFlow Press fitting with attached sleeve into tubing and engage fully.

3 Ensure full tubing insertion at view holes in attached press sleeve. Full insertion means tubing must be completely visible in at least two view holes and partially visible in the one.

If using hand tools continue with steps 4 to 8. If using power tools skip to steps 9 to 12.

Pressing with a Hand Tool

4 For the 1" tool, open the tool handles fully (thumb grip is available to maintain open jaw). Then close tool jaws to engage ratchet (ensure that thumb grip is returned fully forward before closing jaws).

5 Position the PureFlow press tool perpendicular over the press sleeve, resting it against the tool locator ring. For 1" tool, close tool jaws to engage ratchet (ensure that thumb grip is returned fully forward before closing jaws). Make sure the PureFlow press tool is properly aligned (see step 7 if it is not).

The tool locator ring must be in the factory-installed position while making a press to ensure a consistent leak-proof connection. It may be necessary to rotate the tool locator ring to avoid interference between the ring and tool.

6 Close handles, using trigger to reduce grip span if desired.

7 If the PureFlow press tool is not properly aligned with the locator ring, use the emergency release (using a screw driver to turn the emergency release) to open the press tool. Once released, align the PureFlow press tool properly and go back to step 5.

WARNING!
The connection is not leak-proof when the tool has been opened by emergency release. The tool locator ring must be present to ensure a proper PureFlow Press connection.

8 Extend the PureFlow press tool handle and continue ratcheting until automatic tool release occurs at the proper compression force.

CAUTION!
Do not press twice.

Pressing with a Power Tool

9 Insert the appropriate PureFlow press jaw into the press tool and push in the holding pin until it locks.

10 Open jaw and position perpendicular over press sleeve, resting it against the tool locator ring.

The tool locator ring must be in the factory-installed position while making a press to ensure a consistent leak-proof connection. It may be necessary to rotate the tool locator ring to avoid interference between the ring and tool.

11 Start the pressing process; hold the trigger until the jaw has automatically released.

12 When press connection is complete, open and remove the jaw.

WARNING!
The tool locator ring must be present to ensure a proper PureFlow Press connection.

CAUTION!
Do not press twice.

4 Engineering Specifications

PureFlow System

Part 1: General

1.1 Summary

This specification covers branch and main, parallel water distribution systems (ManaBloc), cross-linked polyethylene tubing, and fittings using PureFlow press and PureFlow crimp technology for hot and cold water distribution systems. The system is assembled when the fitting barb is inserted fully into the tubing and either a stainless press sleeve or copper crimp ring is pressed/crimped over the tubing and fitting using the appropriate tool to create a leak proof permanent joint.

1.2 References

ANSI/UL 263: Fire test of building construction and materials. Standard methods of fire endurance tests of building construction and materials.
ASTM E84: surface burning characteristics of building materials.
ASTM F1807: specification for metal insert fittings utilizing a copper crimp ring for SDR9 cross-linked polyethylene (PEX) tubing.
ASTM F2023: test method for evaluating the oxidative resistance of cross-linked (PEX) tubing and systems to hot chlorinated water.
ASTM F2159: specification for plastic insert fittings utilizing a copper crimp ring for SDR9 cross-linked polyethylene (PEX) tubing.
ASTM F3347: Standard Specification for Metal Press Insert Fittings with Factory Assembled Stainless Steel Press Sleeve for SDR9 Cross-linked Polyethylene (PEX) Tubing.
ASTM F3348: Standard Specification for Plastic Press Insert Fittings with Factory Assembled Stainless Steel Press Sleeve for SDR9 Cross-linked Polyethylene (PEX) Tubing.
ASTM F876: specification for cross-linked polyethylene (PEX) tubing.
ASTM F877: specification for cross-linked polyethylene (PEX) plastic hot and cold water distribution systems.
AWWA C904: cross-linked polyethylene (PEX) pressure pipe, ½ in. (12 mm) through 3 in. (76 mm), for water service
CAN/ULC S102.2: standard method of testing for surface burning characteristics of flooring, floor covering and miscellaneous materials and assemblies.
CSA CAN/CSA B137.5: cross-linked polyethylene (PEX) tubing systems for pressure applications.
IAPMO Uniform Mechanical Code.
IAPMO Uniform Plumbing Code.
ICC International Mechanical Code.
ICC International Plumbing Code.
NAPHCC National Standard Plumbing Code.
NSF 14: plastic piping component and related materials.
NSF 61: drinking water system components – health effects.

1.3 Quality Assurance

A. The installer shall be a qualified installer, licensed within the jurisdiction, and familiar with the installation of cross-linked polyethylene (PEX) tubing systems.
B. The installation of cross-linked polyethylene (PEX) tubing for hot and cold water distribution systems shall conform to the requirements of the ICC International Plumbing Code or IAPMO Uniform Plumbing Code.

1.4 Delivery, Storage And Handling

A. The cross-linked polyethylene (PEX) tubing shall be shipped to the job site on truck or in such a manner to protect the tubing. The cross-linked polyethylene fittings and manifolds shall not be handled roughly during shipment. The tubing and fittings shall be unloaded with reasonable care.
B. Cross-linked polyethylene plastic tubing and fittings shall be stored in a flat, dry, well ventilated location, not exposed to direct sunlight. Normal care in handling shall be exercised to avoid abuse of the tubing. The tubing and fittings shall not be thrown or dropped on the ground, walked on, or dragged.

1.5 Project Conditions

A. The location of a manifold with valves shall be accessible and in an area not subject to freezing. Proper support of the manifold shall be provided.
B. PEX tubing should not be left exposed in direct sunlight for extended periods of time – short periods not to exceed 6 months are permissible.
C. Plastic manifolds and fittings should not be left exposed in direct sunlight for extended periods of time — short periods not to exceed 15 days are permissible.

1.6 Warranty

A. The tubing and fittings manufacturer shall warrant that the tubing and fittings are free from defects and conform to the designated standard. The warranty shall only be applicable to tubing and fittings installed in accordance with the manufacturer's installation instructions.
B. The manufacturer of the tubing and fittings shall not be responsible for improper use, handling, or installation of the products.

Part 2: Products

2.1 Manufacturer

Viega LLC
585 Interlocken Blvd.
Broomfield CO, 80021
Phone: (800) 976-9819
www.viega.us

2.2 Material

A. Tubing Standard: Viega PureFlow PEX high-density cross-linked polyethylene tubing shall be manufactured to the requirements of ASTM F876 and meet the standard grade hydrostatic pressure ratings from Plastic Pipe Institute in accordance with TR-4/03. The following three standard grade ratings are required:
   - 200 degrees F (93 degrees C) at 80 psig (551 kPa)
   - 180 degrees F (82 degrees C) at 100 psig (689 kPa)
   - 73.4 degrees F (23 degrees C) at 160 psig (1102 kPa)
     1. Chlorine testing: According to ASTM F876 shall meet or exceed the following end use condition.
        a. End use conditions of : 100% @ 140°F. Per PEX 5306 (CL5).
     2. UV testing: According to ASTM F876 PEX tubing products shall meet or exceed the following exposure limits.
        a. Viega PureFlow PEX 6 months.
B. Fitting Standard: PureFlow Press fittings shall be manufactured from UNS, C87700, C87710 bronze or polyphenylsulfone, meeting the requirements of ASTM F877 and ASTM F3347 (metallic) or ASTM F3348 (polymer) tested as a system with Viega PureFlow PEX tubing. The PureFlow Press sleeve shall be manufactured out of a 304 grade or better stainless steel and have three view holes (attached sleeve) to ensure proper PEX tubing insertion. The attached sleeve fitting will incorporate a tool locator ring that shall be in place while making a proper press connection. The PureFlow Press connection shall be made with a Viega supplied ratcheting PureFlow Press hand tool or PureFlow Press power tool.
C. Fitting Standard: PureFlow Crimp fittings for use with copper crimp rings shall be manufactured from UNS C69300 or C87850 Brass / Eco Brass® meeting the requirements of ASTM F1807 and or PolyAlloy polymer meeting the requirements of ASTM F2159. The PureFlow Crimp connection shall be made by use of a full circle crimp tool designed to crimp F1807 copper crimp rings.
D. Manifolds: Acceptable manifolds shall include:
   - Copper Manifolds: Shall be copper material having a male or female solder, ProPress or PureFlow Crimp inlets. All outlets shall be PureFlow Press, PureFlow Crimp or ProPress fittings. Shall be provided by the Cross-linked Polyethylene system manufacturer.
   - Polymer Manifolds: Shall be plastic material having a male NPSM thread, PureFlow Press or PureFlow Crimp inlets. All outlets shall be PureFlow Press or PureFlow Crimp connections provided by the PEX system manufacturer.

E. Adapter Fittings: PEX adapter fittings shall conform to one of the following ASTM standards; F877, F1807, F2159, or ASME B1.20.1 and be listed to the CSA B137.5. The adapter fittings shall mate to NPT threads, copper tubing, copper fittings or ProPress fittings.

2.3 Source Quality Control

A. The PEX tubing and fitting manufacturer shall maintain a third party listing of the tubing and fittings. The tubing and fittings shall be certified in accordance with ANSI/NSF 14/61 to verify suitability to transport potable water. The tubing and fittings shall have the mark "NSF-pw", "cNSF® us pw-G", or "NSF 61" permanently marked on the product to verify the material listing.
B. The manufacturer of the PEX tubing and fittings shall maintain a quality control program in accordance with ISO 9001 or NSF International in the manufacturing plant to assure that the tubing and fittings are continually being produced to the required standard. The tubing and fittings shall be certified as complying with NSF 14.

Part 3: Execution

3.1 Examination

The installing contractor shall carefully examine the PEX tubing for defects, cuts, abrasions, cracks, fading color, or blemishes. There shall be no cracks or heavy deformations of the tubing. Fittings and manifolds shall be checked for any signs of abuse. Any damaged tubing or fittings shall be rejected.

3.2 Preparation

Viega PureFlow PEX tubing: Cross-linked polyethylene tubing shall be cut with a PEX tubing cutter. The tubing shall be cut squarely and neatly to permit a proper connection between the tubing and fitting.

3.3 Installation General Locations

Plans indicate general location and arrangement of PEX system. Identified locations and arrangements are used to size pipe and calculate friction and loss and other design considerations. Install PEX tubing as indicated, except where deviations to layout are approved on coordination drawings.

3.4 Installation, Pex Tubing

A. Pressure rating: Install components having a pressure rating equal to or greater than the system operating pressure.
B. Install PEX tubing that is free of blemishes, cuts, gouges, kinks or noticeable fading of color.
C. Changes in direction: PEX tubing shall not exceed an eight times the tubing outside diameter (OD) free bend radius or a five times the tubing OD supported bend radius, with use of a Viega approved bend support. Install fittings for changes in direction where any minimum bend radius is exceeded and branch connections.
D. PureFlow Press connections: PureFlow Press fittings shall be made in accordance with the manufacturer's installation instructions. The Stainless press sleeve shall be placed over the end of the squared off PureFlow PEX tubing while fully inserting the fitting barb into the tubing. Full tubing insertion shall be verified by a visual confirmation of PEX being present through the view holes before engaging a press connection. Full insertion for an attached sleeve connection means tubing must be completely visible in at least two view holes and partially visible in the final view hole. The PureFlow Press connection shall be made with a Viega supplied ratcheting PureFlow Press hand tool or PureFlow Press power tool.
E. PureFlow Crimp connections: PureFlow Crimp fittings shall be made in accordance with the manufacturer's installation instructions. The copper crimp ring shall be placed over the end of the squared off PEX tubing then the PureFlow Crimp fitting fully inserted into the tubing. Position the crimp ring ⅛" to ¼" from the end of the tubing before engaging a crimp connection. The PureFlow Crimp connection shall be made with a Viega supplied full circle crimp tool or equivalent.
F. Threaded joints: Threaded joints shall have a potable water listed joint sealant tape applied to the male threads only. Tighten joint with a wrench and backup wrench as required.
G. PEX tubing protection: Protect PEX tubing from exposure to direct and indirect sunlight exposure. PEX tubing shall be stored under cover, shielded from direct and indirect sunlight when material is stored for any length of time.

H. Penetration protection: Provide allowance for thermal expansion and contraction of PEX tubing passing through a wall, floor, ceiling or partition by wrapping with pipe insulation, or by installing through an appropriately sized sleeve. Penetrations of fire resistance rated assemblies shall maintain the rating of the assembly.
I. Backfill material: Back fill material must be free of large rocks, glass, or other sharp objects which can damage the PEX tubing.
J. Horizontal support: PEX tubing must be supported every 32" horizontally with Viega approved suspension clips or plastic insulators.
K. Vertical support: PEX tubing must be supported at each floor or ceiling penetration and every four feet in between.

5 Dimensional Documents

PureFlow Press Fittings

The following fittings are Zero Lead unless noted.

PureFlow Press 90° Elbow Zero Lead Bronze - Model 2816ZL

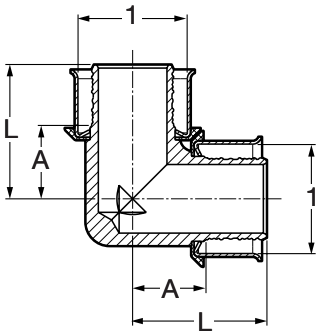

Part No.	Size (in)	A (in)		L (in)	
	1 1	Dec	Frac	Dec	Frac
93520	½ x ½	0.47	½	0.97	1
93540	¾ x ¾	0.59	9/16	1.09	1 1/16
93560	1 x 1	0.88	⅞	1.50	1½
93570	1¼ x 1¼	0.95	15/16	1.81	1 13/16
93580	1½ x 1½	1.14	1⅛	2.01	2
93590	2 x 2	1.33	1 5/16	2.38	2⅜

PureFlow Press 90° Elbow Bronze - Model 2816NG

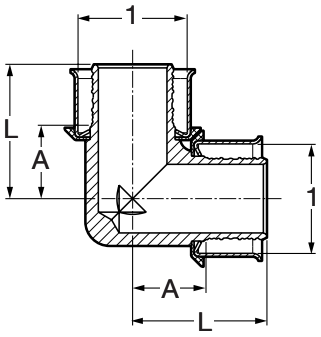

Part No.	Size (in)	A (in)		L (in)	
	1 1	Dec	Frac	Dec	Frac
93530*	⅝ x ⅝	0.59	9/16	1.09	1 1/16

PureFlow Press 90° Elbow Zero Lead Bronze P x MPT - Model 2814ZL

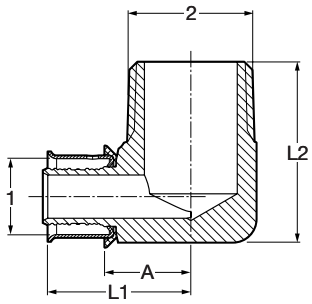

Part No.	Size (in)	A (in)		L1 (in)		L2 (in)	
	1 2	Dec	Frac	Dec	Frac	Dec	Frac
92520	½ x ½ MPT	0.64	⅝	1.13	1⅛	1.06	1 1/16
92525	½ x ¾ MPT	0.74	¾	1.24	1¼	1.14	1⅛
92540	¾ x ¾ MPT	0.74	¾	1.24	1¼	1.13	1⅛
92545	¾ x 1 MPT	0.98	1	1.48	1½	1.61	1⅝
92560	1 x 1 MPT	0.98	1	1.60	1⅝	1.61	1⅝
92565	¾ x 1¼ MPT	1.32	1 5/16	1.81	1 13/16	1.67	1 11/16
92570	1 x 1¼ MPT	1.31	1 5/16	1.93	1 15/16	1.67	1 11/16
92757	1¼ x 1¼ MPT	1.32	1 5/16	2.19	2 3/16	1.67	1 11/16
92580	1½ x 1½ MPT	1.34	1 5/16	2.21	2 3/16	1.73	1¾
92590	2 x 2 MPT	1.65	1⅝	2.70	2 11/16	2.07	2 1/16

PureFlow Press 90° Elbow Zero Lead Bronze P x FTG - Model 2814.6ZL / 2814.7ZL

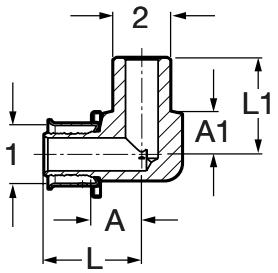

Part No.	Size (in)		A (in)		A1 (in)		L (in)		L1 (in)	
	1	2	Dec	Frac	Dec	Frac	Dec	Frac	Dec	Frac
99310	½ x ½		0.58	9/16	0.47	½	1.07	1 1/16	1.06	1 1/16
99307	½ x ¾		0.70	11/16	0.42	7/16	1.20	1 3/16	1.23	1¼
99311	¾ x ¾		0.70	11/16	0.42	7/16	1.20	1 3/16	1.23	1¼

PureFlow Press 90° Elbow Zero Lead Bronze P x Flare - Model 2896ZL

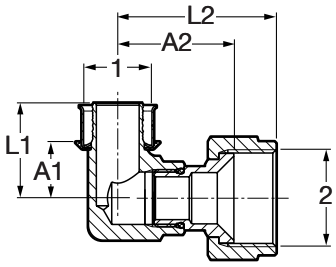

Part No.	Size (in)		A (in)		A1 (in)		L (in)		L1 (in)	
	1	2	Dec	Frac	Dec	Frac	Dec	Frac	Dec	Frac
97150	¾ x ¾		0.74	¾	1.52	1½	1.24	1¼	2.07	2 1/16
97155	1 x 1		0.96	15/16	1.76	1¾	1.57	1 9/16	2.39	2⅜

PureFlow Press 90° Tailpiece Zero Lead Bronze P x F BSP - Model 2897ZL

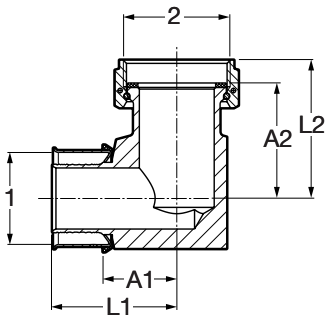

Part No.	Size (in)		A1 (in)		A2 (in)		L1 (in)		L2 (in)	
	1	2	Dec	Frac	Dec	Frac	Dec	Frac	Dec	Frac
96170	1½ x 1½		1.34	1 5/16	2.05	2 1/16	2.21	2 3/16	2.45	2 7/16
96172	2 x 2		1.65	1⅝	2.15	2⅛	2.70	2 11/16	2.70	2 11/16

PureFlow Press 90° Elbow Zero Lead Bronze P x FTG - Model 2814.5NG

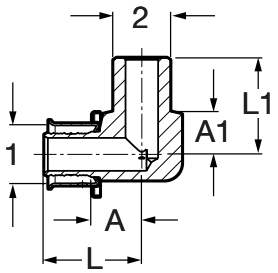

Part No.	Size (in)		A (in)		A1 (in)		L (in)		L1 (in)	
	1	2	Dec	Frac	Dec	Frac	Dec	Frac	Dec	Frac
99310	½ x ½		0.58	9/16	0.47	½	1.07	1 1/16	1.06	1 1/16
99307	½ x ¾		0.70	11/16	0.42	7/16	1.20	1 3/16	1.23	1¼
99311	¾ x ¾		0.70	11/16	0.42	7/16	1.20	1 3/16	1.23	1¼

PureFlow Press 90° Elbow Zero Lead Bronze P x Copper - Model 2814.7ZL / 2814.5ZL

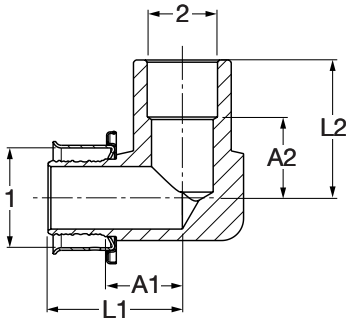

Part No.	Size (in)	A1 (in)		A2 (in)		L1 (in)		L2 (in)	
	1 2	Dec	Frac	Dec	Frac	Dec	Frac	Dec	Frac
99307	½ x ½	0.71	11/16	0.72	¾	1.20	1 3/16	1.23	1¼
99308	½ x ¾	0.68	11/16	0.47	½	1.18	1 3/16	1.22	1¼
99311	¾ x ½	0.71	11/16	0.72	¾	1.20	1 3/16	1.23	1¼
99309	¾ x ¾	0.68	11/16	0.47	½	1.18	1 3/16	1.22	1¼

PureFlow Press 90° Elbow Bronze P x Copper - Model 2814.5NG

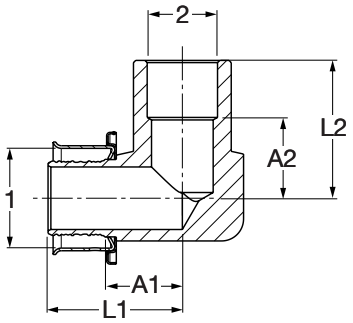

Part No.	Size (in)	A1 (in)		A2 (in)		L1 (in)		L2 (in)	
	1 2	Dec	Frac	Dec	Frac	Dec	Frac	Dec	Frac
89313	⅝ x ½	0.68	11/16	0.72	¾	1.18	1 3/16	1.23	1¼
89312	⅝ x ¾	0.68	11/16	0.48	½	1.18	1 3/16	1.23	1¼

PureFlow Press 90° Elbow Adapter Bronze P x Copper - Model 2825.4ZL

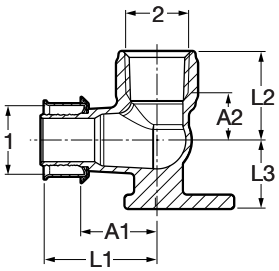

Part No.	Size (in)	A1 (in)		A2 (in)		L1 (in)		L2 (in)		L3 (in)	
	1 2	Dec	Frac	Dec	Frac	Dec	Frac	Dec	Frac	Dec	Frac
94646	½ x ¾	1.00	1	0.61	⅝	1.50	1½	1.14	1⅛	0.88	⅞

PureFlow Compression 90° Elbow Zero Lead Copper CTS x Hose - Model V5053

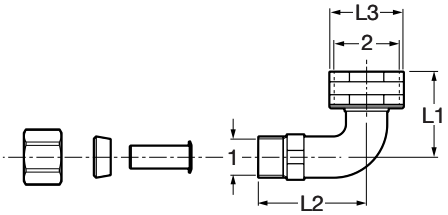

Part No.	Size (in)	L1 (in)		L2 (in)		L3 (in)	
	1 2	Dec	Frac	Dec	Frac	Dec	Frac
46743	⅜ CTS (½ O.D.) comp x ¾ Hose	1.32	1 5/16	1.67	1 11/16	1.14	1⅛

PureFlow Press Tee Zero Lead Bronze P x P x P - Model 2818ZL

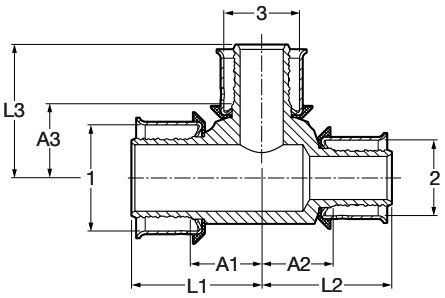

Part No.	Size (in)	A1 (in)		A2 (in)		A3 (in)		L1 (in)		L2 (in)		L3 (in)	
	1 2 3	Dec	Frac	Dec	Frac	Dec	Frac	Dec	Frac	Dec	Frac	Dec	Frac
94020	½ x ½ x ½	0.47	½	0.47	½	0.47	½	0.97	1	0.97	1	0.97	1
94022	½ x ½ x ¾	0.62	⅝	0.62	⅝	0.59	9/16	1.12	1⅛	1.12	1⅛	1.09	1 1/16
94040	¾ x ¾ x ¾	0.59	9/16	0.59	9/16	0.59	9/16	1.09	1 1/16	1.09	1 1/16	1.09	1 1/16
94032	¾ x ½ x ½	0.59	9/16	0.59	9/16	0.62	⅝	1.09	1 1/16	1.09	1 1/16	1.12	1⅛
94034	¾ x ½ x ¾	0.59	9/16	0.62	⅝	0.59	9/16	1.09	1 1/16	1.12	1⅛	1.09	1 1/16
94036	¾ x ¾ x ½	0.59	9/16	0.59	9/16	0.62	⅝	1.09	1 1/16	1.09	1 1/16	1.12	1⅛
94060	1 x 1 x 1	0.88	⅞	0.88	⅞	0.88	⅞	1.50	1½	1.50	1½	1.50	1½
94037	1 x ½ x ½	0.58	9/16	0.59	9/16	0.82	13/16	1.20	1 3/16	1.08	1 1/16	1.32	1 5/16
94039	1 x ½ x 1	0.76	¾	0.74	¾	0.76	¾	1.38	1⅜	1.24	1¼	1.38	1⅜
94038	1 x ¾ x ½	0.58	9/16	0.59	9/16	0.82	13/16	1.20	1 3/16	1.08	1 1/16	1.32	1 5/16
94052	1 x ¾ x ¾	0.80	13/16	0.76	¾	0.84	13/16	1.40	1⅜	1.26	1¼	1.34	1 5/16
94053	1 x ¾ x 1	0.76	¾	0.71	11/16	0.76	¾	1.38	1⅜	1.20	1 3/16	1.38	1⅜
94050	1 x 1 x ½	0.68	11/16	0.68	11/16	0.84	13/16	1.30	1 5/16	1.30	1 5/16	1.34	1 5/16
94056	1 x 1 x ¾	0.80	13/16	0.80	13/16	0.84	13/16	1.42	1 7/16	1.42	1 7/16	1.34	1 5/16
94070	1¼ x 1¼ x 1¼	1.00	1	1.00	1	1.00	1	1.87	1⅞	1.87	1⅞	1.87	1⅞
94071	1¼ x 1 x ¾	0.73	¾	0.74	¾	0.98	1	1.59	1 9/16	1.36	1⅜	1.48	1½
94073	1¼ x 1 x 1	0.81	13/16	0.82	13/16	0.99	1	1.67	1 11/16	1.44	1 7/16	1.61	1⅝
94072	1¼ x 1¼ x ¾	0.79	13/16	0.73	¾	0.99	1	1.59	1 9/16	1.59	1 9/16	1.48	1½
94074	1¼ x 1¼ x 1	0.81	13/16	0.81	13/16	0.99	1	1.67	1 11/16	1.67	1 11/16	1.61	1⅝
94080	1½ x 1½ x 1½	1.14	1⅛	1.14	1	1.14	1⅛	2.01	2	2.01	2	2.01	2
94081	1½ x 1 x ¾	0.73	¾	0.66	11/16	1.13	1⅛	1.59	1 9/16	1.28	1¼	1.62	1⅝
94082	1½ x 1 x 1	0.85	⅞	0.86	⅞	1.13	1⅛	1.71	1 11/16	1.48	1½	1.75	1¾
94083	1½ x 1½ x ¾	0.73	¾	0.73	¾	1.13	1⅛	1.59	1 9/16	1.59	1 9/16	1.62	1⅝
94084	1½ x 1½ x 1	0.85	⅞	0.85	⅞	1.19	1 3/16	1.71	1 11/16	1.71	1 11/16	1.81	1 13/16
94085	1½ x 1½ x 1¼	0.98	1	0.98	1	1.14	1⅛	1.85	1⅞	1.85	1⅞	2.00	2
94090	2 x 2 x 2	1.33	1 5/16	1.33	1 5/16	1.33	1 5/16	2.38	2⅜	2.38	2⅜	2.38	2⅜
94091	2 x 1½ x 1	1.34	1 5/16	1.36	1⅜	1.35	1⅜	2.38	2⅜	2.22	2¼	1.97	1
94092	2 x 1½ x 1¼	1.34	1 5/16	1.36	1⅜	1.40	1⅜	2.38	2⅜	2.22	2¼	2.26	2¼

PureFlow Press Tee Arrestor Zero Lead Brass P x P - Model 2894ZL

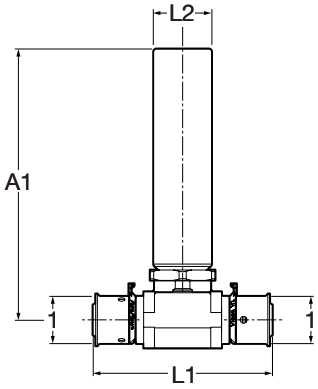

Part No.	Size (in)	A1 (in)		L1 (in)		L2 (in)	
	1 1	Dec	Frac	Dec	Frac	Dec	Frac
97114	½ x ½	3.90	3 15/16	2.59	2 9/16	0.84	13/16

PureFlow Press Adapter Zero Lead Bronze P x MPT - Model 2811ZL

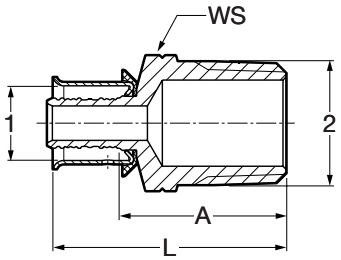

Part No.	Size (in) 1 2	A (in) Dec	A (in) Frac	L (in) Dec	L (in) Frac	WS (in) Dec	WS (in) Frac
90506	⅜ x ½ MPT	1.14	1⅛	1.63	1⅝	0.87	⅞
90521	½ x ½ MPT	1.10	1⅛	1.59	1 9/16	0.87	⅞
90526	½ x ¾ MPT	1.15	1⅛	1.64	1⅝	1.06	1 1/16
90542	¾ x ½ MPT	1.10	1⅛	1.59	1 9/16	0.87	⅞
90541	¾ x ¾ MPT	1.15	1⅛	1.64	1⅝	1.06	1 1/16
90546	¾ x 1 MPT	1.41	1 7/16	1.91	1 15/16	1.34	1 5/16
90562	¾ x 1¼ MPT	1.65	1⅝	2.10	2⅛	1.73	1¾
90556	1 x ¾ MPT	1.18	1 3/16	1.80	1 13/16	1.06	1 1/16
90561	1 x 1 MPT	1.41	1 7/16	2.03	2 1/16	1.34	1 5/16
90566	1 x 1¼ MPT	1.60	1⅝	2.22	2¼	1.73	1¾
90571	1¼ x 1¼ MPT	1.63	1⅝	2.50	2½	1.73	1¾
90581	1½ x 1½ MPT	1.79	1 13/16	2.66	2 11/16	1.97	2
90591	2 x 2 MPT	2.08	2 1/16	3.13	3⅛	2.44	2 7/16

PureFlow Press Adapter Bronze P x MPT - Model 2811NG

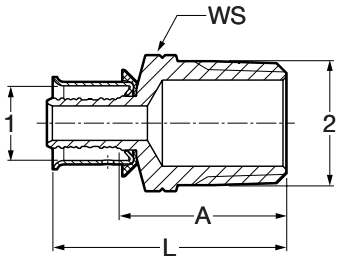

Part No.	Size (in) 1 2	A (in) Dec	A (in) Frac	L (in) Dec	L (in) Frac	WS (in) Dec	WS (in) Frac
80527	⅝ x ½ MPT	1.10	1⅛	1.59	1 9/16	0.87	⅞
80531	⅝ x ¾ MPT	1.15	1⅛	1.64	1⅝	1.06	1 1/16

PureFlow Press Adapter Zero Lead Bronze P x FPT - Model 2812ZL

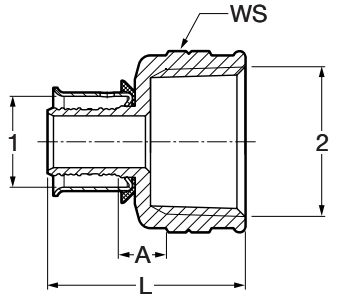

Part No.	Size (in) 1 2	A (in) Dec	A (in) Frac	L (in) Dec	L (in) Frac	WS (in) Dec	WS (in) Frac
91520	½ x ½ FPT	0.35	⅜	1.38	1⅜	0.98	1
91525	½ x ¾ FPT	0.37	⅜	1.42	1 7/16	1.20	1 3/16
91541	¾ x ½ FPT	0.31	5/16	1.34	5/16	0.98	1
91540	¾ x ¾ FPT	0.37	⅜	1.42	1 7/16	1.20	1 3/16
91545	1 x ¾ FPT	0.40	⅜	1.58	1 9/16	1.20	1 3/16
91560	1 x 1 FPT	0.41	7/16	1.69	1 11/16	1.48	1½
91570	1¼ x 1¼ FPT	0.58	9/16	2.13	2⅛	1.85	1⅞
91580	1½ x 1½ FPT	0.60	⅝	2.15	2⅛	2.09	2 1/16
91590	2 x 2 FPT	0.62	⅝	2.36	2⅜	2.60	2⅝

PureFlow Press Adapter Smart Connect technology Zero Lead Bronze P x P - Model 2813PZL

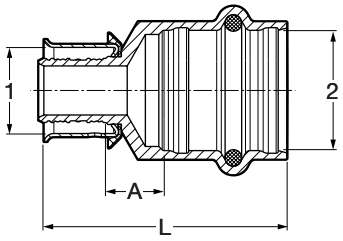

Part No.	Size (in) 1 2	A (in) Dec	A (in) Frac	L (in) Dec	L (in) Frac
99620	½ x ½	0.29	5/16	1.61	1⅝
99626	½ x ¾	0.43	7/16	1.83	1 13/16
99630	¾ x ½	0.23	¼	1.56	1 9/16
99640	¾ x ¾	0.33	5/16	1.73	1¾
99645	1 x ¾	0.35	5/16	1.87	1⅞
99660	1 x 1	0.45	7/16	1.97	2
99665	1¼ x 1	0.49	½	2.26	2¼
99670	1¼ x 1¼	0.49	½	2.38	2⅜
99675	1½ x 1	0.59	9/16	2.36	2⅜
99680	1½ x 1½	0.59	9/16	2.87	2⅞
99685	2 x 1	0.73	¾	2.68	2 11/16
99690	2 x 2	0.55	9/16	2.99	3

PureFlow Press Adapter Smart Connect technology Bronze P x P - Model 2813PNG

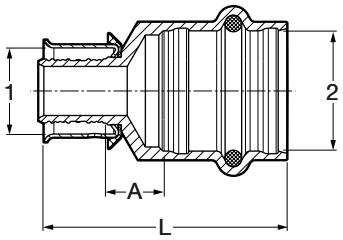

Part No.	Size (in) 1 2	A (in) Dec	A (in) Frac	L (in) Dec	L (in) Frac
69627	⅝ x ½	0.23	¼	1.56	1 9/16
69628	⅝ x ¾	0.33	5/16	1.73	1¾

PureFlow Press Adapter Zero Lead Bronze P x Copper - Model 2813.5ZL

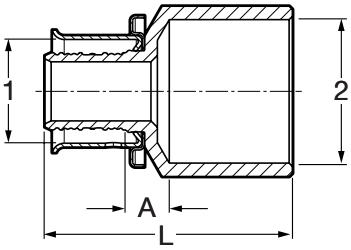

Part No.	Size (in) 1 2	A (in) Dec	A (in) Frac	L (in) Dec	L (in) Frac
92006	⅜ x ½	0.29	5/16	1.28	1¼
92021	½ x ½	0.23	¼	1.24	1¼
92026	½ x ¾	0.27	¼	1.52	1½
92036	¾ x ½	0.20	3/16	1.18	1 3/16
92041	¾ x ¾	0.27	¼	1.52	1½
92045	¾ x 1	0.37	⅜	1.77	1¾
92060	1 x 1	0.34	5/16	1.89	1⅞
92070	1¼ x 1¼	0.43	7/16	2.28	2¼
92080	1½ x 1½	0.45	7/16	2.44	2 7/16
92090	2 x 2	0.43	7/16	2.60	2⅝

PureFlow Press Adapter Bronze P x Copper - Model 2813.5NG

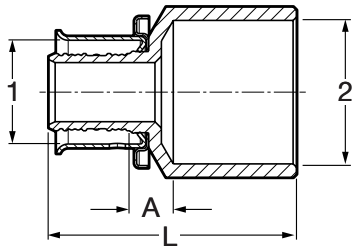

Part No.	Size (in) 1 2	A (in) Dec	A (in) Frac	L (in) Dec	L (in) Frac
82027	⅝ x ½	0.25	¼	1.24	1¼
82031	⅝ x ¾	0.27	¼	1.52	1½

PureFlow Press Adapter Zero Lead Bronze P x FTG - Model 2813.1ZL

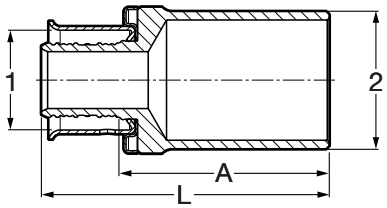

Part No.	Size (in) 1 2	A (in) Dec	A (in) Frac	L (in) Dec	L (in) Frac
97520	½ x ½	1.26	1¼	1.77	1¾
97525	½ x ¾	1.34	1 5/16	1.83	1 13/16
97535	¾ x ½	1.33	1 5/16	1.83	1 13/16
97540	¾ x ¾	1.45	1 7/16	1.95	1 15/16
97545	¾ x 1	1.45	1 7/16	1.95	1 15/16
97560	1 x 1	1.51	1½	2.13	2⅛
97570	1¼ x 1¼	1.83	1 13/16	2.72	2¾
97580	1½ x 1½	2.21	2 3/16	3.07	3 1/16
97590*	2 x 2	2.36	2⅜	3.41	3 7/16

**For use with solder fittings only.*

PureFlow Press Adapter Bronze P x FTG - Model 2813.1NG

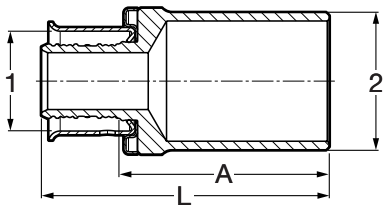

Part No.	Size (in) 1 2	A (in) Dec	A (in) Frac	L (in) Dec	L (in) Frac
97530	⅝ x ½	1.28	1¼	1.77	1¾
97531	⅝ x ¾	1.39	1⅜	1.89	1⅞

PureFlow Press Adapter Zero Lead Bronze P x FTG - Model 2813.3ZL

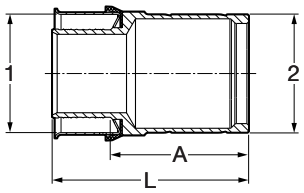

Part No.	Size (in) 1 2	A (in) Dec	A (in) Frac	L (in) Dec	L (in) Frac
97690*	2 x 2	2.50	2½	3.54	3 9/16

**For use with ProPress fittings only.*

PureFlow Press Adapter Zero Lead Bronze P x PB - Model 2813.2ZL

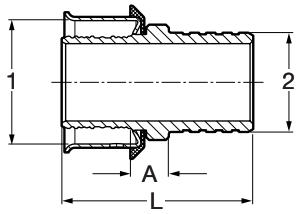

Part No.	Size (in) 1 2	A (in) Dec	A (in) Frac	L (in) Dec	L (in) Frac
97820	½ x ½	0.28	¼	1.38	1⅜
97840	¾ x ¾	0.28	¼	1.38	1⅜

PureFlow Press Adapter Zero Lead Bronze P x Flare - Model 2892ZL

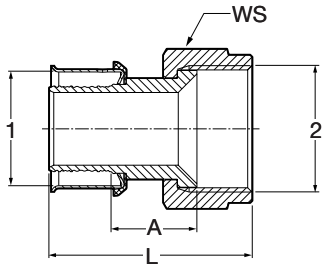

Part No.	Size (in) 1 2	A (in) Dec	A (in) Frac	L (in) Dec	L (in) Frac	WS (in) Dec	WS (in) Frac
97140	¾ x ¾ Flare	0.67	11/16	1.71	1 11/16	1.50	1½
97160	1 x ¾ Flare	0.86	⅞	2.03	2	1.50	1½
97165	1 x 1 Flare	0.65	⅝	1.89	1⅞	1.80	1 13/16

PureFlow Press Tailpiece Zero Lead Bronze P x F BSP - Model 2893ZL

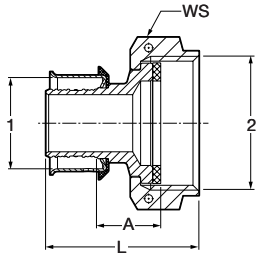

Part No.	Size (in) 1 2	A (in) Dec	A (in) Frac	L (in) Dec	L (in) Frac	WS (in) Dec	WS (in) Frac
96140	¾ x 1	0.63	⅝	1.50	1½	1.46	1 7/16
96160	1 x 1	0.84	1 13/16	1.83	1 13/16	1.46	1 7/16
96165	1 x 1¼	0.78	1¾	1.80	1 13/16	1.81	1 13/16

PureFlow Press Coupling Zero Lead Bronze P x P - Model 2815ZL

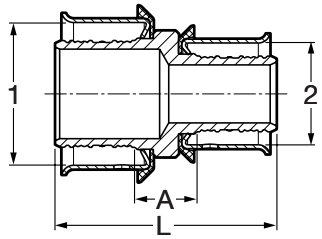

Part No.	Size (in) 1 2	A (in) Dec	A (in) Frac	L (in) Dec	L (in) Frac
93001	5/16 x 5/16	0.40	3/8	1.38	1 3/8
93000	3/8 x 3/8	0.40	3/8	1.38	1 3/8
93005	1/2 x 3/8	0.40	3/8	1.38	1 3/8
93020	1/2 x 1/2	0.40	3/8	1.38	1 3/8
93050	1/2 x 3/4	0.40	3/8	1.38	1 3/8
93030	5/8 x 5/8	0.40	3/8	1.38	1 3/8
93040	3/4 x 3/4	0.40	3/8	1.38	1 3/8
93055	3/4 x 1	0.46	7/16	1.58	1 9/16
93071	3/4 x 1 1/4	0.51	1/2	1.87	1 7/8
93072	3/4 x 1 1/2	0.51	1/2	1.87	1 7/8
93060	1 x 1	0.46	7/16	1.69	1 11/16
93065	1 x 1 1/4	0.54	9/16	2.03	2
93073	1 x 1 1/2	0.54	9/16	2.03	2
93070	1 1/4 x 1 1/4	0.67	11/16	2.40	2 3/8
93075	1 1/4 x 1 1/2	0.59	9/16	2.32	2 5/16
93080	1 1/2 x 1 1/2	0.67	11/16	2.40	2 3/8
93090	2 x 2	0.66	11/16	2.76	2 3/4
93091	2 x 1 1/2	0.69	11/16	2.60	2 5/8

PureFlow Press Stop Valve Straight Zero Lead Chrome Plated Brass P x CTS 1/4 Turn - Model 2842.3ZL

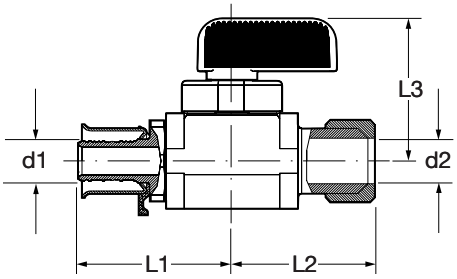

Part No.	Size (in) d1 d2	L1 (in) Dec	L1 (in) Frac	L2 (in) Dec	L2 (in) Frac	L3 (in) Dec	L3 (in) Frac
94023	3/8 x 1/4 CTS (3/8 OD) Comp	2.53	2 1/2	1.20	1 3/16	1.20	1 3/16
94031	1/2 x 1/4 CTS (3/8 OD) Comp	2.51	2 1/2	1.20	1 3/16	1.20	1 3/16

PureFlow Press Stop Valve Angled Zero Lead Chrome Plated Brass P x CTS 1/4 Turn - Model 2842.4ZL

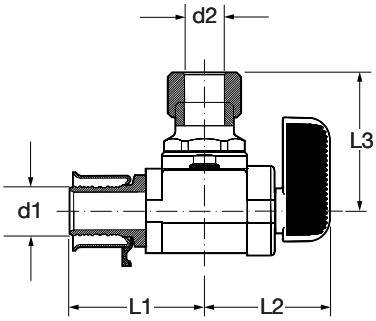

Part No.	Size (in) d1 d2	L1 (in) Dec	L1 (in) Frac	L2 (in) Dec	L2 (in) Frac	L3 (in) Dec	L3 (in) Frac
93515	3/8 x 1/4 CTS (3/8 OD) Comp	2.51	2 1/2	1.03	1	1.20	1 3/16
93511	1/2 x 1/4 CTS (3/8 OD) Comp	2.51	2 1/2	1.03	1	1.20	1 3/16

PureFlow Press Ball Valve Zero Lead Brass P x P - Model 2842.2ZL

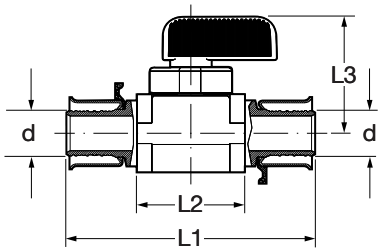

Part No.	Size (in)	L1 (in)		L2 (in)		L3 (in)	
	d	Dec	Frac	Dec	Frac	Dec	Frac
94500	⅜	2.62	2⅝	1.20	1 3/16	1.20	1 3/16
94521	½	2.59	2 9/16	1.20	1 3/16	1.20	1 3/16
94541	¾	2.72	2¾	1.30	1 5/16	1.30	1 3/16

PureFlow Press Ball Valve Zero Lead Brass P x P - Model 2870ZL

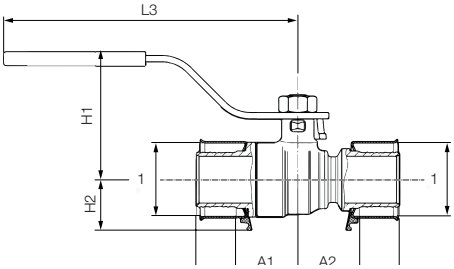

Part No.	Size (in)	L1 (in)		L2 (in)		L3 (in)		L4 (in)	
	d	Dec	Frac	Dec	Frac	Dec	Frac	Dec	Frac
98200	1	3.15	3⅛	1.89	1⅞	1.99	2	4.57	4 9/16
98201	1¼	3.60	3⅝	1.75	1¾	2.10	2⅛	4.57	4 9/16
98202	1½	3.88	3⅞	2.15	2⅛	2.47	2½	5.77	5¾
98203	2	4.57	4 9/16	2.44	2 7/16	2.69	2 11/16	5.77	5¾

ProPress Valve Zero Lead Brass P x FTG - Model 2842.1ZL

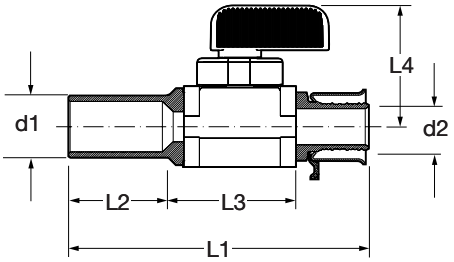

Part No.	Size (in)	L1 (in)		L2 (in)		L3 (in)		L4 (in)	
	d1 d2	Dec	Frac	Dec	Frac	Dec	Frac	Dec	Frac
95002	½ x ½ FTG	3.01	3	1.20	1 3/16	1.10	1⅛	1.20	1 3/16

PureFlow Press Wall Hydrant Zero Lead Chrome Plated Brass - Model 2888.0ZL

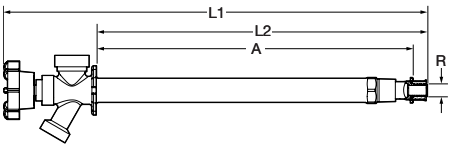

Part No.	R (in)	A (in)		L1 (in)		L2 (in)	
		Dec	Frac	Dec	Frac	Dec	Frac
97120	½	11.7	11 11/16	15.6	15⅝	12.2	12 3/16
97121	¾	11.8	11 13/16	15.7	15 11/16	12.3	12 5/16

Shower Valve - Model 2842.5

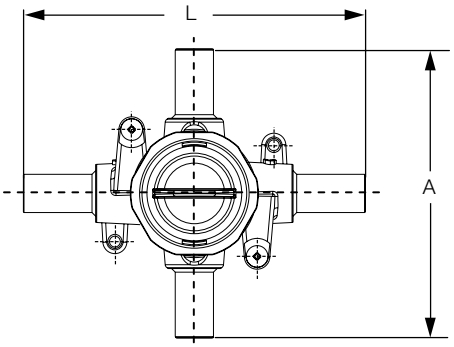

Part No.	Stub Out (in)	A (in)		L (in)	
		Dec	Frac	Dec	Frac
93516	½	4.75	4¾	5.625	5⅝

Shower Valve - Model 2842.6

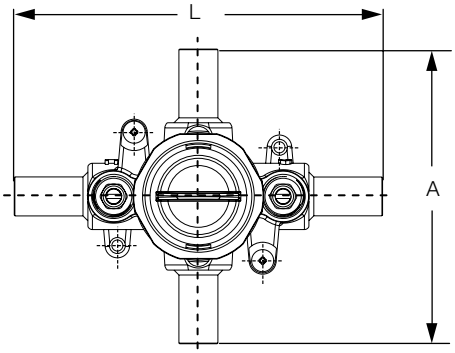

Part No.	Stub Out (in)	A (in)		L (in)	
		Dec	Frac	Dec	Frac
93517	½	4.75	4¾	5.875	5⅞

PureFlow Press Tub 90° Elbow Zero Lead Brazed Copper - Model 2820.0ZL

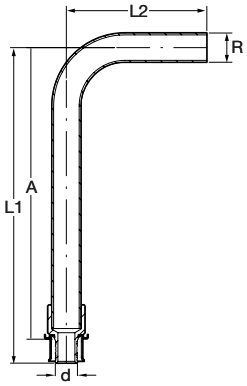

Part No.	Size (in)		A (in)		L1 (in)		L2 (in)	
	d	R	Dec	Frac	Dec	Frac	Dec	Frac
92221	½ x ½ Copper		6.22	6¼	6.74	6¾	3.00	3

PureFlow Press 90° Stub-out Brazed Copper P x FTG - Model 2820.1ZL

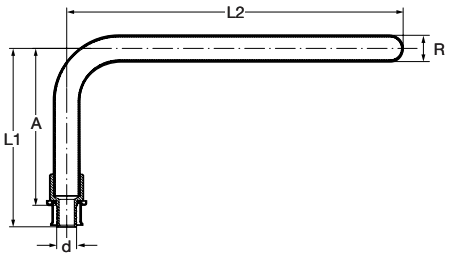

Part No.	Size (in)	A (in)		L1 (in)		L2 (in)	
	d R	Dec	Frac	Dec	Frac	Dec	Frac
92406	⅜ x ½ Copper	3.76	3¾	4.28	4¼	8.00	8
92421	½ x ½ Copper	3.72	3¾	4.24	4¼	8.00	8
92441	¾ x ¾ Copper	4.77	4¾	4.24	4¼	8.00	8

PureFlow Press 90° Stub-out Brazed Copper P x FTG - Model 2820.4ZL

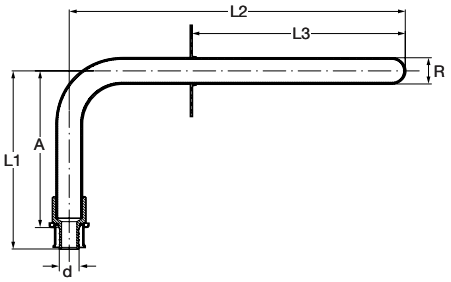

Part No.	Size (in)	A (in)		L1 (in)		L2 (in)		L3 (in)	
	d R	Dec	Frac	Dec	Frac	Dec	Frac	Dec	Frac
92305	⅜ x ½ Copper	3.76	3¾	4.28	4¼	8.00	8	6.00	6
92321	½ x ½ Copper	3.72	3¾	4.24	4¼	8.00	8	6.00	6

PureFlow Press Stub-out Brazed Copper P x FTG - Model 2820.2ZL

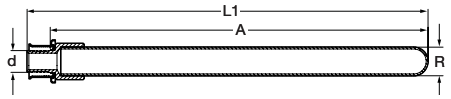

Part No.	Size (in)	A (in)		L1 (in)	
	d R	Dec	Frac	Dec	Frac
92609	½ x ½ Copper	8.00	8	8.74	8¾
92616	½ x ½ Copper	15.00	15	15.74	15¾

PureFlow Press Adapter Zero Lead Bronze P x CTS - Model 2895ZL

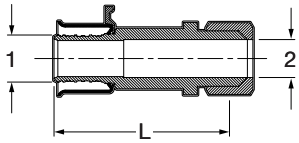

Part No.	Size (in)	L (in)	
	1 2	Dec	Frac
97112	⅜ x ¼ CTS (⅜ OD)	1.77	1¾
97113	½ x ¼ CTS (⅜ OD)	1.77	1¾

PureFlow Press Outlet box Zero Lead for Washing Machine, Ice Maker - Model 2872.0ZL / 2872.7ZL

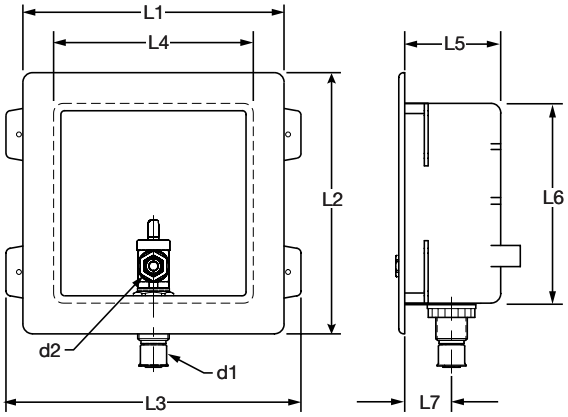

Part No.	Size (in) d1 d2	Face Plate L1 (in) Dec	Frac	L2 (in) Dec	Frac	Box Dimensions L3 (in) Dec	Frac	L4 (in) Dec	Frac	L5 (in) Dec	Frac	L6 (in) Dec	Frac	L7 (in) Dec	Frac
98000	½ PEX x ¼ O.D.	6.80	6 13/16	6.80	6 13/16	7.68	7 11/16	5.20	5 3/16	2.50	2½	5.20	5 3/16	1.22	1¼
97220*	½ PEX x ¼ O.D.	6.80	6 13/16	6.80	6 13/16	7.68	7 11/16	5.20	5 3/16	2.50	2½	5.20	5 3/16	1.22	1¼

** with hammer arrestor*

PureFlow Press Outlet Box Zero Lead for Washing Machine, Ice Maker - Model 2872.1US / 2872.6ZL

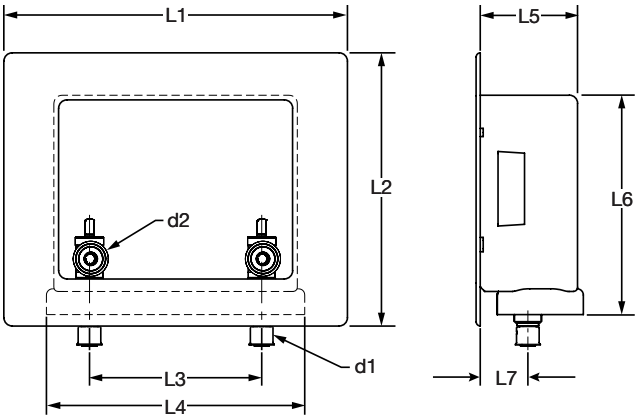

Part No.	Size (in) d1 d2	Face Plate L1 (in) Dec	Frac	L2 (in) Dec	Frac	Box Dimensions L3 (in) Dec	Frac	L4 (in) Dec	Frac	L5 (in) Dec	Frac	L6 (in) Dec	Frac	L7 (in) Dec	Frac
97001	½ PEX x ¾ O.D.	10.40	10 3/8	8.30	8 5/16	5.20	5 3/16	7.40	7 3/8	2.90	2 7/8	6.60	6 5/8	1.43	1 7/16
97212*	½ PEX x ¾ O.D.	10.40	10 3/8	8.30	8 5/16	5.20	5 3/16	7.40	7 3/8	2.90	2 7/8	6.60	6 5/8	1.43	1 7/16

PureFlow Press Fire-Rated Outlet Box Zero Lead for Washing Machine, Ice Maker - Model 2872.2 / 2872.6

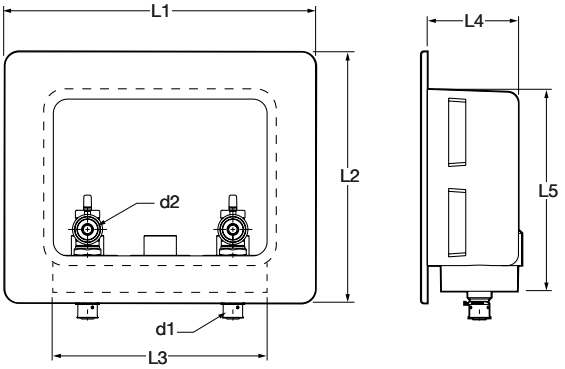

Part No.	Size (in) d1 d2	Face Plate L1 (in) Dec	L1 (in) Frac	L2 (in) Dec	L2 (in) Frac	Box Dimensions L3 (in) Dec	L3 (in) Frac	L4 (in) Dec	L4 (in) Frac	L5 (in) Dec	L5 (in) Frac
97006	½ PEX x ¼ O.D.	10.90	10⅞	8.80	8 13/16	8.20	8 3/16	3.40	3⅜	7.10	7⅛
97008*	½ PEX x ¼ O.D.	10.90	10⅞	8.80	8 13/16	8.20	8 3/16	3.40	3⅜	7.10	7⅛

** with hammer arrestor*

PureFlow Press Fire-Rated Outlet Box Zero Lead for Washing Machine, Ice Maker - Model 2872.5 / 2872.3

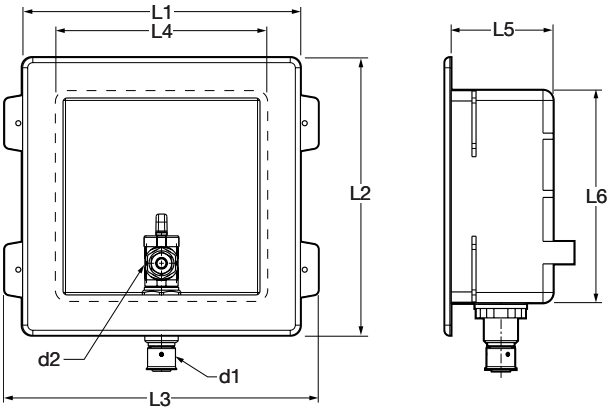

Part No.	Size (in) d1 d2	Face Plate L1 (in) Dec	L1 (in) Frac	L2 (in) Dec	L2 (in) Frac	Box Dimensions L3 (in) Dec	L3 (in) Frac	L4 (in) Dec	L4 (in) Frac	L5 (in) Dec	L5 (in) Frac	L6 (in) Dec	L6 (in) Frac
98001	½ PEX x ¾ O.D.	5.25	5¼	7.29	7 5/16	6.90	6⅞	3.90	3⅞	2.83	2 13/16	5.69	5 11/16
97007*	½ PEX x ¾ O.D.	5.25	5¼	7.29	7 5/16	6.90	6⅞	3.90	3⅞	2.83	2 13/16	5.69	5 11/16

** with hammer arrestor*

Dimensional Documents

PureFlow Press Polymer Fittings

PureFlow Press 90° Elbow Polymer - Model V5616

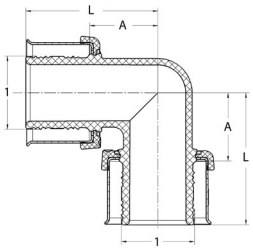

Part No.	Size (in)	A (in)		L (in)	
	1	Dec	Frac	Dec	Frac
49210	⅜	0.51	½	1.11	1⅛
49220	½	0.51	½	1.11	1⅛
49240	¾	0.68	11/16	1.27	1¼
49260	1	0.77	¾	1.52	1½
49270	1¼	0.98	1	2.08	2 1/16
49280	1½	1.09	1 1/16	2.19	2 3/16
49290	2	1.65	1⅝	2.72	2¾

PureFlow Press 45° Elbow Polymer - Model V5626

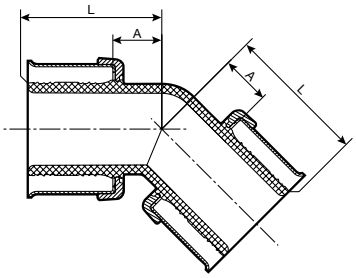

Part No.	Size (in)	A (in)		L (in)	
	1	Dec	Frac	Dec	Frac
49285	1½	0.66	11/16	1.75	1¾
49286	2	0.96	15/16	2.03	2

PureFlow Press Tee Polymer - Model V5618

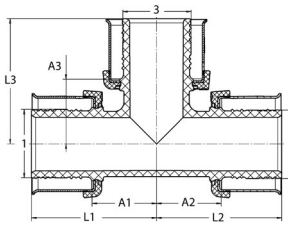

Part No.	Size (in)	A1 (in)		A2 (in)		A3 (in)		L1 (in)		L2 (in)		L3 (in)	
	1 2 3	Dec	Frac	Dec	Frac	Dec	Frac	Dec	Frac	Dec	Frac	Dec	Frac
49200	⅜ x ⅜ x ⅜	0.51	½	0.51	½	0.51	½	1.11	1⅛	1.11	1⅛	1.11	1⅛
49322	½ x ⅜ x ⅜	0.49	½	0.44	7/16	0.54	9/16	1.09	1 1/16	1.04	1 1/16	1.13	1⅛
49332	½ x ½ x ⅜	0.49	½	0.49	½	0.54	9/16	1.09	1 1/16	1.09	1 1/16	1.13	1⅛
49520	½ x ½ x ½	0.51	½	0.51	½	0.51	½	1.11	1⅛	1.11	1⅛	1.11	1⅛
49334	½ x ½ x ¾	0.67	11/16	0.67	11/16	0.60	⅝	1.26	1¼	1.26	1¼	1.19	1 3/16
49433	¾ x ½ x ½	0.59	9/16	0.49	½	0.69	11/16	1.18	1 3/16	1.09	1 1/16	1.28	1¼
49443	¾ x ¾ x ½	0.59	9/16	0.59	9/16	0.69	11/16	1.18	1 3/16	1.18	1 3/16	1.28	1¼
49434	¾ x ½ x ¾	0.71	11/16	0.71	11/16	0.71	11/16	1.30	1 5/16	1.30	1 5/16	1.30	1 5/16
49540	¾ x ¾ x ¾	0.71	11/16	0.71	11/16	0.71	11/16	1.30	1 5/16	1.30	1 5/16	1.30	1 5/16
49533	1 x ½ x ½	0.59	9/16	0.49	½	0.74	¾	1.34	1 5/16	1.09	1 1/16	1.34	1 5/16
49543	1 x ¾ x ½	0.60	⅝	0.59	9/16	0.74	¾	1.35	1⅜	1.18	1 3/16	1.34	1 5/16
49544	1 x ¾ x ¾	0.71	11/16	0.65	⅝	0.85	⅞	1.47	1½	1.25	1¼	1.44	1 7/16
49535	1 x ½ x 1	0.81	13/16	0.79	13/16	0.81	13/16	1.56	1 9/16	1.36	1⅜	1.56	1 9/16
49545	1 x ¾ x 1	0.84	13/16	0.77	¾	0.84	13/16	1.59	1 9/16	1.37	1⅜	1.59	1 9/16
49553	1 x 1 x ½	0.58	9/16	0.58	9/16	0.74	¾	1.34	1 5/16	1.34	1 5/16	1.34	1 5/16
49554	1 x 1 x ¾	0.71	11/16	0.71	11/16	0.84	13/16	1.47	1½	1.47	1½	1.44	1 7/16
49560	1 x 1 x 1	0.71	11/16	0.71	11/16	0.71	11/16	1.47	1½	1.47	1½	1.47	1½
49754	1¼ x 1 x ¾	0.73	¾	0.67	11/16	0.93	15/16	1.82	1 13/16	1.42	1 7/16	1.53	1½
49755	1¼ x 1 x 1	0.84	13/16	0.78	¾	0.91	15/16	1.94	1 15/16	1.53	1½	1.66	1 11/16
49774	1¼ x 1¼ x ¾	0.73	¾	0.73	¾	0.93	15/16	1.82	1 13/16	1.82	1 13/16	1.53	1½
49775	1¼ x 1¼ x 1	0.84	13/16	0.84	13/16	0.91	15/16	1.94	1 15/16	1.94	1 15/16	1.66	1 11/16
49570	1¼ x 1¼ x 1¼	0.98	1	0.98	1	0.98	1	2.07	2 1/16	2.07	2 1/16	2.07	2 1/16
49854	1½ x 1 x ¾	0.72	¾	0.79	13/16	1.03	1	1.82	1 13/16	1.54	1 9/16	1.63	1⅝
49855	1½ x 1 x 1	0.85	⅞	0.91	15/16	1.03	1	1.94	1 15/16	1.67	1 11/16	1.78	1¾
49874	1½ x 1¼ x ¾	0.77	¾	0.77	¾	1.04	1 1/16	1.82	1 13/16	1.82	1 13/16	1.63	1⅝
49875	1½ x 1¼ x 1	0.90	⅞	0.90	⅞	1.06	1 1/16	1.94	1 15/16	1.94	1 15/16	1.79	1 13/16
49877	1½ x 1¼ x 1¼	1.02	1	1.02	1	1.11	1⅛	2.06	2 1/16	2.06	2 1/16	2.16	2 3/16
49883	1½ x 1½ x ½	0.72	¾	0.72	¾	1.03	1	1.81	1 13/16	1.81	1 13/16	1.60	1⅝
49884	1½ x 1½ x ¾	0.72	¾	0.72	¾	1.03	1	1.82	1 13/16	1.82	1 13/16	1.60	1⅝
49885	1½ x 1½ x 1	0.85	⅞	0.85	⅞	1.04	1 1/16	1.94	1 15/16	1.94	1 15/16	1.78	1¾
49887	1½ x 1½ x 1¼	0.97	1	0.97	1	1.07	1 1/16	2.06	2 1/16	2.06	2 1/16	2.15	2⅛
49580	1½ x 1½ x 1½	1.09	1 1/16	1.09	1 1/16	1.09	1 1/16	2.18	2 3/16	2.18	2 3/16	2.18	2 3/16
49984	2 x 1½ x ¾	1.07	1 1/16	1.10	1⅛	1.42	1 7/16	2.14	2⅛	2.15	2⅛	1.99	2
49985	2 x 1½ x 1	1.07	1 1/16	1.10	1⅛	1.41	1 7/16	2.14	2⅛	2.15	2⅛	2.15	2⅛
49987	2 x 1½ x 1¼	1.25	1¼	1.10	1⅛	1.50	1½	2.33	2 5/16	2.15	2⅛	2.50	2½
49988	2 x 1½ x 1½	1.25	1¼	1.21	1 3/16	1.46	1 7/16	2.33	2 5/16	2.26	2¼	2.50	2½
49993	2 x 2 x ½	0.98	1	0.98	1	1.46	1 7/16	2.06	2 1/16	2.06	2 1/16	2.05	2 1/16
49994	2 x 2 x ¾	0.98	1	0.98	1	1.50	1½	2.06	2 1/16	2.06	2 1/16	2.05	2 1/16
49995	2 x 2 x 1	1.10	1⅛	1.10	1⅛	1.53	1½	2.17	2 3/16	2.17	2 3/16	2.26	2¼
49997	2 x 2 x 1¼	1.25	1¼	1.25	1¼	1.50	1½	2.33	2 5/16	2.33	2 5/16	2.54	2 9/16
49998	2 x 2 x 1½	1.37	1⅜	1.37	1⅜	1.46	1 7/16	2.45	2 7/16	2.45	2 7/16	2.50	2½
49590	2 x 2 x 2	1.65	1⅝	1.65	1⅝	1.65	1⅝	2.72	2¾	2.72	2¾	2.72	2¾

PureFlow Press Coupling Polymer - Model V5615

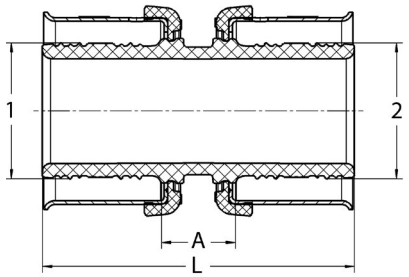

Part No.	Size (in)	A (in)		L (in)	
	1 2	Dec	Frac	Dec	Frac
49402	⅜ x ⅜	0.47	½	1.66	1 11/16
49342	½ x ⅜	0.42	7/16	1.61	1⅝
49403	½ x ½	0.47	½	1.66	1 11/16
49404	¾ x ¾	0.47	½	1.66	1 11/16
49343	¾ x ½	0.43	7/16	1.62	1⅝
49354	1 x ¾	0.47	½	1.82	1 13/16
49405	1 x 1	0.47	½	1.98	2
49347	1¼ x ¾	0.65	⅝	2.34	2 5/16
49357	1¼ x 1	0.48	½	2.33	2 5/16
49407	1¼ x 1¼	0.51	½	2.69	2 11/16
49348	1½ x ¾	0.69	11/16	2.37	2⅜
49358	1½ x 1	0.62	⅝	2.47	2½
49378	1½ x 1¼	0.50	½	2.69	2 11/16
49408	1½ x 1½	0.51	½	2.69	2 11/16
49398	2 x 1½	1.05	1 1/16	3.16	3 3/16
49409	2 x 2	1.02	1	3.16	3 3/16

PureFlow Press Test Plug Polymer - Model V5656

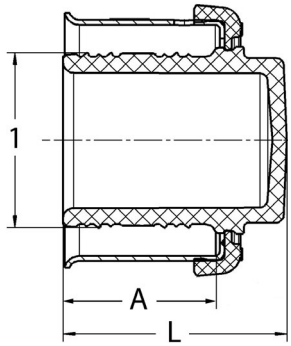

Part No.	Size (in)	A (in)		L (in)	
	1	Dec	Frac	Dec	Frac
49722	⅜	0.60	⅝	0.95	15/16
49723	½	0.60	⅝	0.95	15/16
49744	¾	0.60	⅝	0.95	15/16
49765	1	0.75	¾	1.10	1⅛
49770	1¼	1.10	1⅛	1.46	1 7/16
49780	1½	1.10	1⅛	1.46	1 7/16
49790	2	1.07	1 1/16	1.93	1 15/16

PureFlow Press Multi-port Tee Polymer Flow Through - Model V5636

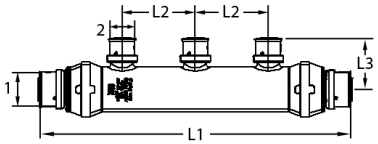

Part No	Size (in)	Outlets	L1 (in)		L2 (in)		L3 (in)	
	1 2		Dec	Frac	Dec	Frac	Dec	Frac
49152	¾ x ½	2	6.58	6 9/16	2.00	2	1.42	1 7/16
49153	¾ x ½	3	8.58	8 9/16	2.00	2	1.42	1 7/16
49054	¾ x ½	4	10.58	10 9/16	2.00	2	1.42	1 7/16
49254	1 x ¾ x ½	4	10.72	10¾	2.00	2	1.42	1 7/16
49256	1 x ½	6	14.85	14⅞	2.00	2	1.42	1 7/16
49258	1 x ½	8	18.85	18⅞	2.00	2	1.42	1 7/16

PureFlow Press Multi-port Tee Polymer Closed - Model V5636.1

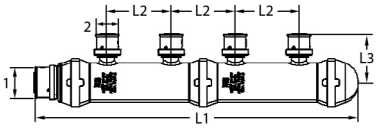

Part No	Size (in) 1 2	Outlets	L1 (in)		L2 (in)		L3 (in)	
			Dec	Frac	Dec	Frac	Dec	Frac
49004	¾ x ½	4	10.14	10⅛	2.00	2	1.42	1 7/16
49206	1 x ½	6	14.27	14¼	2.00	2	1.42	1 7/16
49208	1 x ½	8	18.28	18¼	2.00	2	1.42	1 7/16

PureFlow Press Lav Adapter Polymer P x Lav - Model V5613.3

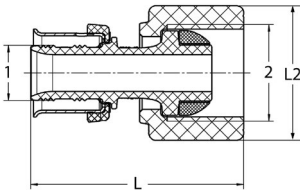

Part No.	Size (in) 1 2	L (in)		L2 (in)	
		Dec	Frac	Dec	Frac
49324	⅜ x ½ Lav	1.82	1 13/16	1.15	1⅛
49333	½ x ½ Lav	1.82	1 13/16	1.15	1⅛
49344	¾ x ¾ Lav	1.78	1¾	1.15	1⅛

PureFlow Press Closet Adapter Polymer P x Closet - Model V5613.4

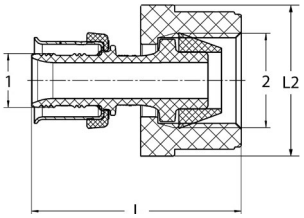

Part No.	Size (in) 1 2	L (in)		L2 (in)	
		Dec	Frac	Dec	Frac
49223	⅜ x ½ Closet	1.84	1 13/16	1.3	1 5/16
49233	½ x ½ Closet	1.84	1 13/16	1.3	1 5/16

6 Limited Warranty – Viega Plastic Systems

Subject to the conditions and limitations in this Limited Warranty ("Warranty"), Viega LLC ("Viega") warrants to end users, installers, and distributors in the United States and Canada that the following products ("Viega Products") will be free of failure caused by a manufacturing defect from the date of installation for the time periods specified in the tables included in this Warranty.

This Warranty will be valid only in the event the following conditions have been met: The Viega Products have been properly installed (1) by a licensed contractor in compliance with applicable building, permit, and inspection codes; (2) under normal conditions of use; (3) under applications approved by Viega; (4) under Viega-specified system operating conditions; (5) using tools compatible with Viega systems; and (6) in alignment with Viega's listings.

Further, you have a right to a remedy under this Warranty only if the Viega Product failure resulted from a manufacturing defect in the Viega Product and if the failure occurred during the applicable warranty period. You do not have a remedy under this Warranty if the failure was caused by (1) components other than those manufactured and/or sold by Viega; (2) failure to design, install, inspect, test, or maintain the Viega Product in accordance with Viega's installation and product instructions in effect at the time of installation; (3) use of Viega Products under non-recommended system operating conditions (e.g., water pressures, temperatures, or other external chemical or physical conditions); (4) improper handling or protection of the Viega Product prior to, during, or after installation (e.g., inadequate freeze protection or exposure to environmental conditions not recommended for the application); (5) chemically corrosive or aggressive water conditions (e.g., unauthorized solvents or chemicals; antifreeze, rust inhibitor, or other treatment fluids); or (6) acts of nature, including, without limitation, earthquakes, fire, or weather damage.

In the event of a failure of a Viega Product covered by this Warranty, it is the duty and responsibility of the end user to take appropriate measures to mitigate all potential damage, including making timely repairs to the system in which the Viega Product has been installed. The part or parts which you claim failed must be kept and returned to Viega for testing. Viega may be contacted at the phone number or mailing address below. All warranty claims must be made within 30 calendar days after the failure has (or should reasonably have) been discovered. You should be prepared to ship, at your expense, the Viega Product which you claim failed due to a manufacturing defect, with documentation of the installation date and the amount spent on any repair or replacement if performed by you. Within a reasonable time after receiving the Viega Product, Viega will investigate the cause of the failure, which includes the right to inspect the Viega Product at a Viega location and reasonable access to the site of any alleged damage. Viega will notify you in writing of the results of its review.

For products with warranty periods of 10 years or more: If Viega determines that the failure or any resulting damages were the result of a manufacturing defect in the Viega Product covered by this Warranty and occurred during the first 10 years covered by this Warranty, Viega will reimburse the property owner for reasonable repair or replacement charges for drywall, flooring, paint, or personal property damage resulting from the failure. After the first 10 years, the Warranty will cover only material costs for pipe and fittings sold by Viega, excluding any labor or installation costs.

Termination connections to non-Viega end-use devices or equipment such as filtration, water softeners, shower valves, faucets, stops, and other such devices, when utilizing Viega PureFlow PEX, does not void the system warranty as described.

VIEGA SHALL NOT BE LIABLE FOR CONSEQUENTIAL ECONOMIC LOSS DAMAGES (E.G., ECONOMIC LOSS, WATER OR PROPERTY DAMAGE, OR MOLD REMEDIATION) UNDER ANY LEGAL THEORY AND WHETHER ASSERTED BY DIRECT ACTION, FOR CONTRIBUTION, INDEMNITY, OR OTHERWISE.

THIS WARRANTY IS IN LIEU OF ALL OTHER WARRANTIES, EXPRESS, OR IMPLIED, INCLUDING, WITHOUT LIMITATION, THE IMPLIED WARRANTIES OF MERCHANTABILITY AND FITNESS FOR A PARTICULAR PURPOSE OR ANY STATUTE OF LIMITATIONS RELATING TO SUCH WARRANTIES. Viega will be responsible for remedies only if all conditions of this Warranty have been met. Other than this Warranty, Viega does not authorize any person, company, contractor, or distributor to create any additional warranty, obligation, or liability in connection with the Viega Product.

This Warranty gives you specific legal rights, and you also may have other rights which may vary from state to state. This Warranty shall be interpreted and applied under the law of the state in which the product is installed and is intended as a COMMERCIAL WARRANTY.

Continues on next page.

Viega Tubing		
Tubing	**Connected Fitting**	**Warranty Term**
Viega PureFlow PEX (ASTM F876)	PureFlow Press polymer fittings (ASTM F3348)	30 years
	PureFlow Press alloy fittings (ASTM F3347)	25 years
	PureFlow Crimp polymer fittings (ASTM F2159)	25 years
	PureFlow Crimp alloy fittings (ASTM F1807)	25 years
	Non-Viega crimp polymer fittings (ASTM F2159)	10 years
	Non-Viega crimp alloy fittings (ASTM F1807)	10 years
Viega PureFlow Barrier PEX (ASTM F3253)	PureFlow Press polymer fittings (ASTM F3348)	30 years
	PureFlow Press alloy fittings (ASTM F3347)	30 years
	PureFlow Crimp polymer fittings (ASTM F2159)	5 years
	PureFlow Crimp alloy fittings (ASTM F1807)	5 years

Non-Viega Tubing		
Tubing	**Connected Fitting**	**Warranty Term**
Non-Viega PEX (ASTM F877)	PureFlow Press polymer fittings (ASTM F3348)	10 years
	PureFlow Press alloy fittings (ASTM F3347)	10 years
	PureFlow Crimp polymer fittings (ASTM F2159)	5 years
	PureFlow Crimp alloy fittings (ASTM F1807)	5 years

Other Plastic Viega Products	
Product	**Warranty Term**
ManaBloc® / MiniBloc	10 years
PureFlow valves	5 years
Accessible metal compression or metal/polyalloy crimp fittings, manifolds, and panels	5 years
PureFlow Press hand tools[1]	2 years
Lav, closet risers, and riser accessories[2]	2 years
Controls, mixing stations, or electrical components	2 years
PureFlow Crimp hand tools and tubing cutters[1]	1 year

[1]Power tools and jaws used with PureFlow Press fittings are warranted by the manufacturer, and Viega extends no separate warranty on those tools or jaws.

[2]Connection to non-Viega plumbing products intended for riser and/or water service applications does not void the system warranty provided all pipe, fittings, valves, and manifolds are sold by Viega after the transition location.

Manufactured housing and recreational vehicle manufacturers in the United States are subject to a separate warranty available here. Please reference the applicable limited warranty in effect during the time of installation.

Viega LLC
585 Interlocken Blvd.
Broomfield, CO 80021

Phone (800) 976-9819
www.viega.us