SIEMENS

Electromotoric actuator

SSC131.09U, SSC131.39U, SSC161.05U, SSC161.35U

- SSC131.09U (fail-in-place) and SSC131.39U (fail-safe): Operating voltage AC 24 V, 3-position (floating) control signal
- SSC161.05U (fail-in-place), and SSC161.35U (fail-safe): Operating voltage AC/DC 24 V, modulating control signal DC 0...10 V
- SSC131.39U, SSC161.05U and SSC161.35U are self-calibrating to the valve stroke
- Modulating variants have position feedback signal
- Direct mounting with coupling nut, no tools required
- Manual override
- Position and actuator motion indication (LED)
- Positioning force 67 lbf (300 N)
- Parallel operation of multiple actuators possible

Use

- For 2-way and 3-way Powermite 599 MT Series, 599-02000 - 599-02079
- Typical application in chilled ceiling, VAV, unit ventilators, fan coil unit and other terminal unit applications
- Max.10 units of SSC161.05DU, SSC161S.35DU can operate in parallel, provided the controller output suffices.
- Max.10 units of SSC131.09U can operate in parallel, provided the controller output suffices.
- For 3-position actuator, SSC131.39U, 24 actuators can run in parallel.

NOTICE	
!	• SSC131.39U floating fail-safe actuators cannot be run in parallel with legacy SSC81.5U actuators. • For parallel operation of floating fail-safe SSC actuators all actuators in parallel must be the same part number.

Technical design

3-position control signal (SSC131.09U)

Voltage at Y1:	Stem extends	Normally open valve closes, normally closed valve opens
Voltage at Y2:	Stem retracts	Normally open valve opens, normally closed valve closes
No voltage at Y1 or Y2:	Actuator maintains its current position	

3-position control signal (SSC131.39U)

• Voltage at Y1:	Stem extends	Normally open valve closes, normally closed valve opens
• Voltage at Y2:	Stem retracts	Normally open valve opens, normally closed valve closes
• No voltage at Y1 or Y2:	Actuator maintains its current position	
• Voltage applied to both Y1 and Y2 (not recommended): When no power is supplied, the SSC131.39U actuator fails with the stem fully retracted.	Stem moves to Y2	

DC 0...10 V control signal (SSC161.05U, SSC161.35U)

- The valve opens / closes in proportion to the control signal at Y.
- At DC 0 V, actuator stem is retracted, the normally closed valve is fully closed and the normally open valve is fully open.
- When no power is supplied, the SSC161.05U actuator maintains its current position and the SSC161.35U actuator fails with the stem fully retracted.
- This actuator provides a DC 0…10 V position feedback signal proportional to the stroke of the actuator stem.

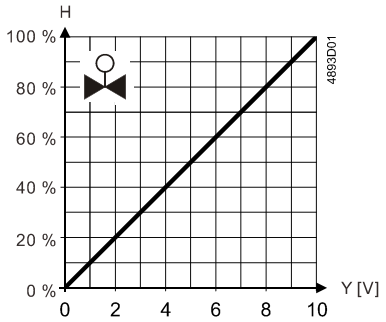

Y = Control signal Y [V]

H = Percentage of calibrated valve stroke

LED indication

Status	LED indication patterns
Variants	SSC161.05U, SSC161.35U, SSC131.39U
Modulation: Stem retracting	Flashing green in sequence: LED1-->LED2-->LED3 (500 ms each)
Modulation: Stem extending	Flashing green in sequence: LED3-->LED2-->LED1 (500 ms each)
Stem position	At H0 - H40: Constant green (LED3) At H40 - H60: Constant green (LED2) At H60 - H100: Constant green (LED1)
Fail-safe*	Flashing red (LED2): 500 ms on, 500 ms off
Calibration	Flashing green (LED2): 100 ms on, 100 ms off
Error	Constant red (LED2)
Manual operation	Flashing green/red alternatively (LED2): Green 500 ms, red 500 ms
Ultra-cap initial charging*	Constant green & red simultaneously (LED2): Constant orange

* Only available for SSC131.39U, SSC161.35U.

Variants	LED	Color	Pattern	Description
SSC131.09U	LED 1	Green	Constant	Actuator stem is fully extended.
	LED 2	Green	Constant	Actuator stem is moving in-between.
	LED 3	Green	Constant	Actuator stem is fully retracted.

Type summary

Type	Stock number	Operating voltage	Running speed	Running time 5.5 mm	Control signal	Actuator characteristic
SSC131.09U	S55155-A108	AC 24 V	16 s/mm	88 s ± 25 %	AC 24 V	-
SSC131.39U	S55155-A109	AC 24 V	16 s/mm	88 s ± 25 %	AC 24 V	-
SSC161.05U	S55155-A110	AC/DC 24 V	5 s/mm	27.5 s ± 25 %	DC 0...10 V	Linear
SSC161.35U	S55155-A111	AC/DC 24 V	5 s/mm	27.5 s ± 25 %	DC 0...10 V	Linear

Ordering

When ordering, specify both stock number and quantity.
Example:

Type	Stock number	Designation	Quantity
SSC161.05U	S55155-A110	Electromotoric actuator	60

Delivery

Valves and actuators can be ordered assembled in the factory or ordered separately. For easier valve assembly, actuators ordered separately have the actuator stem fully retracted.

Equipment combinations

Valves

Combinable valves for SSC131.09U, SSC131.39U, SSC161.05U, SSC161.35U - 2-way Powermite 599 MT Series (Stainless Steel Trim)

Action	Nominal Line Size		Flow Rate		Connection		
	Inch	mm	Cv	Kvs	FxF	FxUM	AFxUM
Normally Closed	0.5	15	0.4	(0.34)	599-02015	599-02016	–
	0.5	15	0.63	(0.54)	599-02017	599-02018	–
	0.5	15	1.0	(0.85)	599-02019	599-02020	–
	0.5	15	1.6	(1.37)	599-02021	599-02022	–
	0.5	15	2.5	(2.15)	599-02023	599-02024	–
	0.5	15	4	(3.44)	599-02025	599-02026	–
	0.75	20	6.3	(5.43)	599-02027	599-02028	–
	1	25	10	(8.6)	599-02029	–	–
Normally Open	0.5	15	0.4	(0.34)	599-02047	599-02048	–
	0.5	15	0.63	(0.54)	599-02049	599-02050	–
	0.5	15	1.0	(0.85)	599-02051	599-02052	–
	0.5	15	1.6	(1.37)	599-02053	599-02053	–
	0.5	15	2.5	(2.15)	599-02055	599-02056	599-02057
	0.5	15	4	(3.44)	599-02058	599-02059	599-02060
	0.75	20	6.3	(5.43)	599-02061	599-02062	–

Action	Nominal Line Size		Flow Rate		Connection		
	Inch	mm	Cv	Kvs	FxF	FxUM	AFxUM
	1	25	10	(8.6)	599-02063	–	–

Combinable valves for SSC131.09U, SSC131.39U, SSC161.05U, SSC161.35U - 2-way Powermite 599 MT Series (Brass Trim)

Action	Nominal Line Size		Flow Rate		Connection		
	Inch	mm	Cv	Kvs	FxF	FxUM	AFxUM
Normally Closed	0.5	15	0.4	(0.34)	599-02000	599-02001	–
	0.5	15	0.63	(0.54)	599-02002	599-02003	–
	0.5	15	1.0	(0.85)	599-02004	599-02005	–
	0.5	15	1.6	(1.37)	599-02006	599-02007	–
	0.5	15	2.5	(2.15)	599-02008	599-02009	–
	0.5	15	4	(3.44)	599-02010	599-02011	–
	0.75	20	6.3	(5.43)	599-02012	599-02013	–
	1	25	10	(8.6)	599-02014	–	–
Normally Open	0.5	15	0.4	(0.34)	599-02030	599-02031	–
	0.5	15	0.63	(0.54)	599-02032	599-02033	–
	0.5	15	1.0	(0.85)	599-02034	599-02035	–
	0.5	15	1.6	(1.37)	599-02036	599-02037	–
	0.5	15	2.5	(2.15)	599-02038	599-02039	599-02040
	0.5	15	4	(3.44)	599-02041	599-02042	599-02043
	0.75	20	6.3	(5.43)	599-02044	599-02045	–
	1	25	10	(8.6)	599-02046	–	–

Combinable valves for SSC131.09U, SSC131.39U, SSC161.05U, SSC161.35U - 3-way Powermite 599 MT Series

Nominal Line Size		Flow Rate		Connection	
Inch	mm	Cv	Kvs	Brass Trim	Stainless Steel Trim
0.5	15	0.4	(0.34)	599-02064	599-02072
0.5	15	0.63	(0.54)	599-02065	599-02073
0.5	15	1.0	(0.85)	599-02066	599-02074
0.5	15	1.6	(1.37)	599-02067	599-02075
0.5	15	2.5	(2.15)	599-02068	599-02076
0.5	15	4	(3.44)	599-02069	599-02077
0.75	20	6.3	(5.43)	599-02070	599-02078
1	25	10	(8.6)	599-02071	599-02079

Note: To ensure trouble-free operation of third-party valves with the SSC.. actuators, the valves must satisfy the following requirements:

- Threaded connections with coupling nut ¾".
- Nominal force F > 67 lbf (300 N)
- Dimension X ≥ 0.50 in (12.82 mm)
- Dimension Y ≤ 0.73 in (18.65 mm)

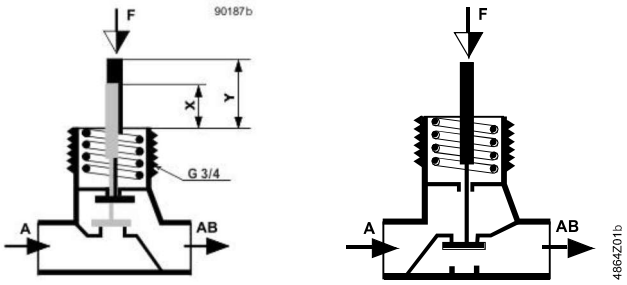

Product documentation

Topic	Title	Document ID
Installation	Mounting instruction	A6V13122038
Standards and directives	CE declarations	A5W00254962A
	RCM conformity	A5W00254983A
Environmental compatibility	Environmental declarations for SSC161.05U	A5W00242127A
	Environmental declarations for SSC131.39U, SSC161.35U	A5W00244689A

Related documents such as the environmental declarations, declarations of conformity, etc., can be downloaded from the following Internet address:

www.siemens.com/bt/download

Notes

Engineering

The actuators must be electrically connected in accordance with local regulations (see "Connection diagrams").

⚠ CAUTION	
⚠	**National safety regulations** Failure to comply with national safety regulations may result in personal injury and property damage. ● Observe national provisions and comply with the appropriate safety regulations.

Observe permissible temperatures (see "Technical data [▶ 11]").

Mounting

⚠ WARNING	
	● Do not use pipe wrenches, pliers or similar tools. ● Avoid lateral pressure or (cable) tension on the mounted actuator!

Valve and actuator are easy to assemble on site before commissioning:

- Remove protective cover from the valve body.
- Position the actuator and tighten the connection nut manually.
- See "Mounting instruction" for graphical instructions.

Orientation

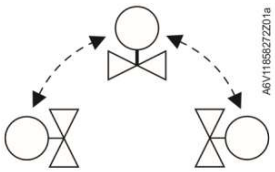

Commissioning

When commissioning, check both wiring and functioning of the actuator.

- Actuator stem extends Normally open valve closes, normally closed valve opens
- Actuator stem retracts Normally open valve opens, normally closed valve closes

NOTICE	
!	The actuator must be commissioned only with a correctly mounted valve in place!

Self-calibration (SSC131.39U, SSC161.05U, SSC161.35U)

When operating voltage is applied, the actuator self-calibrates (fully retracted → fully extended → setpoint).

⚠ CAUTION	
	Never intervene manually during self-calibration.

NOTICE	
!	● Correct calibration is only possible with valve stroke > 0.05 inch (1.2 mm). Valve stroke < 0.05 inch (1.2 mm) results in calibration failure. ● If calibration fails, the actuator performs another calibration automatically after 10 seconds. ● After three failed calibration attempts, the actuator stem remains in the extended position and the valves are open.

Electrical fail-safe function (SSC161.35U, SSC131.39U)

When first connected to power, or after a power failure, the capacitor which stores energy for the fail-safe function will be charged. This process takes up to 180 seconds. While the capacitor is being charged, the actuator cannot respond to any control signals.

In the event of a power failure of more than 5 seconds, the actuator will return to its fail-safe position within 30 seconds.

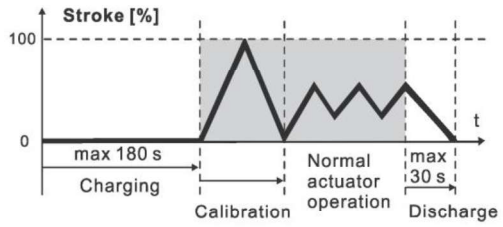

Manual operation

A 3-mm Allen wrench can be used to move the actuator to any position.

To move the actuator stem manually (SSC161.05U, SSC161.35U, SSC131.39U)

1. Open the cover using a proper screwdriver.
2. Press and hold down button (a) illustrated below for at least three seconds.
   - The actuator ignores any control signal from the controller.
3. Adjust the position of the actuator stem by rotating Allen wrench (b) illustrated below clockwise or counter-clockwise.
   - The actuator stem moves down if you rotate clockwise; it moves up if you rotate counter-clockwise. The manually set position is retained.
4. To release the actuator from manual operation mode, press and hold down button (a) illustrated below again for at least three seconds.
   - The actuator runs a self-calibration automatically. Control signal sent from the controller takes effect.
5. Close the cover.

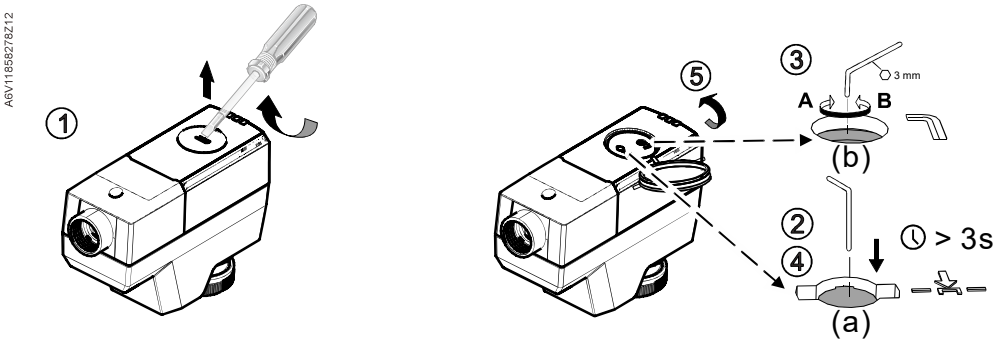

NOTICE	
!	**If operating voltage is applied to actuator, press button (a) before and after manually adjusting the position of the actuator stem.** If no operating voltage and control signal are applied, manual operation can be done without pressing button (a).

To move the actuator stem manually (SSC131.09U)

1. Open the cover using a proper screwdriver.
2. Adjust the position of the actuator stem by rotating Allen wrench (b) illustrated below clockwise or counter-clockwise.
   - The actuator stem moves down if you rotate clockwise; it moves up if you rotate counter-clockwise. The manually set position is retained.
3. Close the cover.

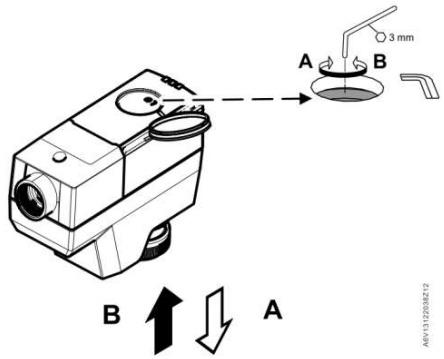

Cabling operation

1. Unscrew cover screw
2. Remove cover
3. Remove terminal block and connect or disconnect wire terminals
4. Re-install the terminal block
5. Install the cover
6. Screw in the cover screw

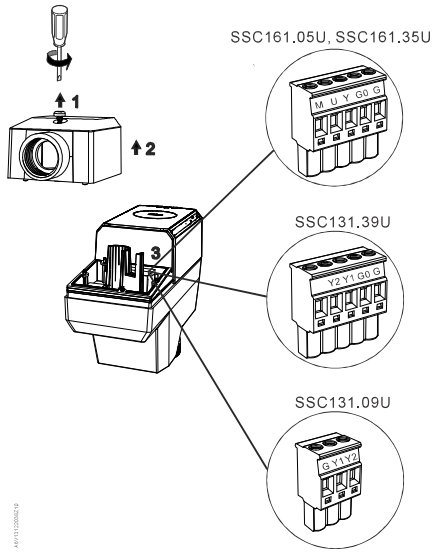

Maintenance

The actuators require no maintenance.

⚠ WARNING	
	Operating voltage must be switched off during any maintenance!

NOTICE	
!	When carrying out service work on the plant, note the following: ● Switch off operating voltage. ● If necessary, disconnect electrical connections from the terminals. ● The actuator must be commissioned only with a correctly mounted valve in place!

Repair

The actuators cannot be repaired; the complete unit must be replaced.

Disposal

	This symbol or any other national label indicate that the product, its packaging, and, where applicable, any batteries may not be disposed of as domestic waste. Delete all personal data and dispose of the item(s) at separate collection and recycling facilities in accordance with local and national legislation. For additional details, refer to Siemens information on disposal.

Warranty

Technical data on specific applications are valid only together with Siemens products listed under "Equipment combinations". Siemens rejects any and all warranties in the event that third-party products are used.

Open Source Software (OSS) (SSC131.39U, SSC161.05U, SSC161.35U)

Software license overview

These devices use Open Source Software (OSS). All Open Source Software components used in the product (to include copyrights and licensing agreement) are available at http://siemens.com/bt/download.

Firmware version	OSS document		Device
	Document ID	Title	
2.10.0 or above	A6V13503690	Readme OSS for Modulating Room Actuator 200 N, 300 N	All

Technical data

Power supply		
Operating voltage	SSC131.09U, SSC131.39U	AC 24 V (± 20 %)
	SSC161.05U, SSC161.35U	AC 24 V (± 15 %) or DC 24 V (± 20 %)
Frequency	50/60 Hz	
Power consumption	SSC131.09U	Normal Operation: 1 VA (AC)
	SSC161.05U	Normal Operation: 3.5 VA (AC); 1.5 W (DC) Peak (Ultra cap recharge): N/A
	SSC161.35U	Normal Operation: 3.5 VA (AC); 1.5 W (DC) Peak (Ultra cap recharge): 8 VA (AC); 4 W (DC)
	SSC131.39U	Normal Operation: 3 VA (AC); 1.5 W (DC) Peak (Ultra cap recharge): 6 VA (AC); 4 W (DC)
Primary fuse or breaker rating	External, 2 A quick blow	

Signal input	SSC131.39U, SSC161.05U, SSC161.35U	SSC131.09U
Control signal	Modulating: DC 0...10 V to Y Floating: AC 24 V to Y1 or Y2	Floating: AC 24 V to Y1 or Y2
Input impedance	100 kOhm	-
Parallel operation (number of actuators)	Max. 10 modulating or 24 floating actuators[1)]	Max. 10 modulating actuators[1)]

[1)] Provided that the controller output is sufficient.

Signal output (SSC131.39U, SSC161.05U, SSC161.35U)	
Feedback signal (modulating actuators only)	DC 0...10 V
Max. output current	1 mA
Max. output voltage	-
Resolution	1:100

Operating data	
Position with de-energized contact Y	See "Technical design”
Running speed (time for 5.5 mm)	SSC161.05U, SSC161.35U: 5 s/mm ± 25 % (27.5 s ± 25 %)
	SSC131.09U, SSC131.39U: 16 s/mm ± 25 % (88 s ± 25 %)
Positioning force	67 lbf (300 N)
Stroke	0.05 to 0.25 inch (1.2…6.5 mm)
Permissible temperature of medium in the connected valve	34 to 248 °F (1…120 ℃)

Electrical connection	
Permissible length for signal lines	65 ft (20 m)
Wire cross section	18...20 AWG (0.5...0.75 mm²)
Cable diameter	<0.22 inch (5.5 mm)

Mounting	
Connection to valve	Brass coupling nut 3/4” inch
Orientation	Above horizontal

Standards	
EU conformity declaration (CE)	A5W00254962A
RCM conformity declaration	A5W00254983A
UK conformity declaration (UKCA)	A5W00257055A
Housing protection degree	NEMA 2 / IP20 (EN 60529)
Protection class according to EN 60730	III
Pollution degree	2
Overvoltage category	I
Environmental compatibility	The product environmental declaration (SSC161.05U: A5W00242127A; SSC131.39U, SSC161.35U: A5W00244689A) contains data on environmentally compatible product design and assessments (RoHS compliance, materials composition, packaging, environmental benefit, disposal).
UL Approval Federal Communications Commission	UL as per UL60730-1, UL60730-2-14 http://ul.com/database cUL as per CSA – CAN E60730-1, E730-2-14 FCC CFR 47 Part 15 Class B
ICES003	CAN ICES-3 (B)/NMB-3(B)

FCC regulations

Modification of this device to receive cellular radio telephone service signals is prohibited under FCC rules and federal law.

This equipment has been tested and found to comply with the limits for a Class B digital device, pursuant to part 15 of the FCC Rules. These limits are designed to provide reasonable protection against harmful interference in a residential installation. This equipment generates, uses and can radiate radio frequency energy and, if not installed and used in accordance with the instructions, may cause harmful interference to radio communications. However, there is no guarantee that interference will not occur in a particular installation. If this equipment does cause harmful interference to radio or television reception, which can be determined by turning the equipment off and on, the user is encouraged to try to correct the interference by one or more of the following measures:

Reorient or relocate the receiving antenna.

Increase the separation between the equipment and receiver.

Connect the equipment into an outlet on a circuit different from that to which the receiver is connected.

Consult the dealer or an experienced radio/TV technician for help.

Changes or modifications not expressly approved by the party responsible for compliance could void the user's authority to operate the equipment.

Statement

This device complies with part 15 of the FCC Rules. Operation is subject to the following two conditions: (1) This device may not cause harmful interference, and (2) this device must accept any interference received, including interference that may cause undesired operation.

Housing color	
Cover/base	2003, Ti-Gray

General ambient conditions			
	Operation	**Transport**	**Storage**
Temperature	34 to 122°F (1…50 ℃)	-13 to 158°F (-25…70 ℃)	-13 to 158°F (-25…70 ℃)
Humidity	5…95 % r.h. non condensing	<95 % r.h. non condensing	5…95 % r.h. non condensing
Atmospheric pressure	Min. 700 hPa, corresponding to max. 3,000 m above sea level	-	-

Material	
Cover/base	PC + ABS
Connecting nut	Brass

Weight	
SSC131.09U	10.0 ounces (283 g)
SSC131.39U	10.5 ounces (298 g)
SSC161.05U	9.7 ounces (276 g)
SSC161.35U	10.5 ounces (298 g)

Connection terminals

Connection terminals for SSC131.09U

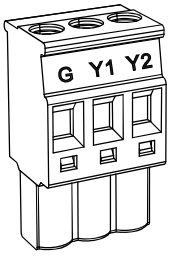

G	System potential (AC 24 V)
Y1	3-position
Y2	3-position

Connection terminals for SSC131.39U

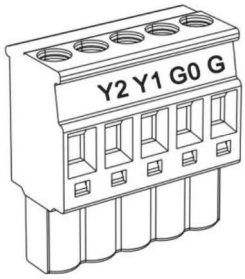

G	System potential (AC 24 V)
G0	System neutral
Y1	Stem extends
Y2	Stem retracts

Connection terminals for SSC161.05U, SSC161.35U

G	System potential (AC/DC 24 V)
G0	System neutral
Y	Control signal DC 0...10 V
U	Feedback signal
M	Measurement reference

Connection diagrams for SSC131.09U

Neutral switch

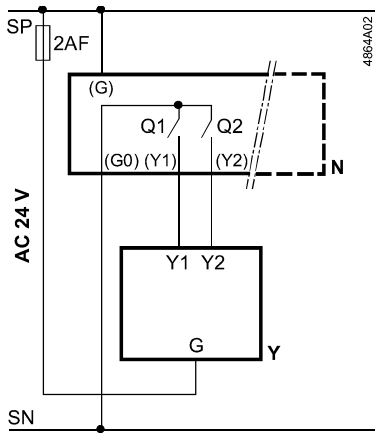

N = Controller
Y = Actuator
SP, G = System potential AC 24 V
SN, G0 = System neutral
Y1, Y2 = Control signal OPEN, CLOSE
Q1, Q2 = Controller contacts
2AF = Fuse rated current is 2A

Hot switch

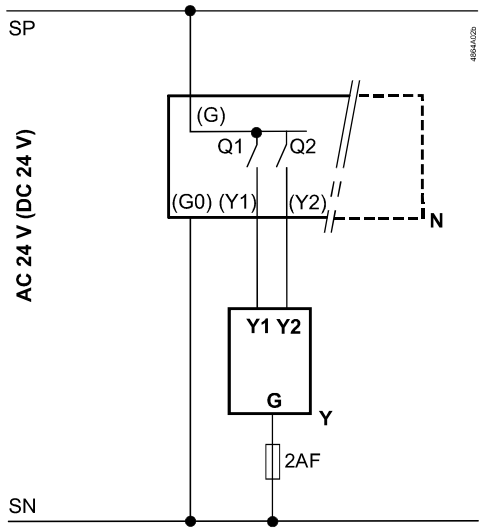

Connection diagrams for SSC131.39U

Neutral switch

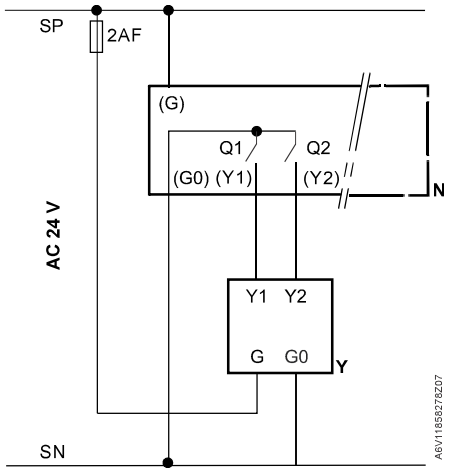

N = Controller

Y = Actuator

SP, G = System potential AC 24 V

SN, G0 = System neutral

Y1, Y2 = Control signal OPEN, CLOSE

Q1, Q2 = Controller contacts

2AF = Fuse rated current is 2A

Hot switch

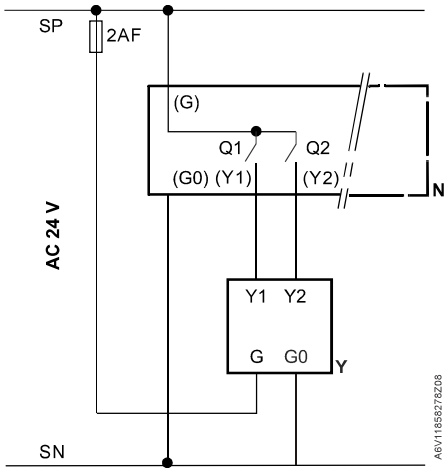

N = Controller

Y = Actuator

SP, G = System potential AC 24 V

SN, G0 = System neutral

Y1, Y2 = Control signal OPEN, CLOSE

Q1, Q2 = Controller contacts

2AF = Fuse rated current is 2A

Connection diagrams for SSC161.05U, SSC161.35U

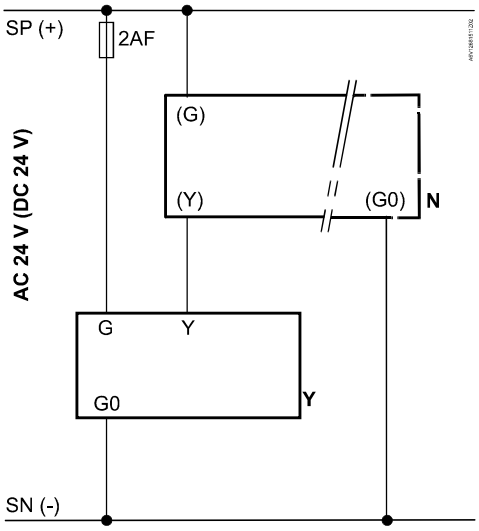

N = Controller

Y = Actuator

SP, G = System potential AC/DC 24 V

SN, G0 = System neutral

Y = Control signal

U = Feedback signal

M = Measurement reference

2AF = Fuse rated current is 2A

NOTICE	
!	• SSC131.39U floating fail-safe actuators cannot be run in parallel with legacy actuators. • For parallel operation of floating fail-safe SSC actuators all actuators in parallel must be the same part number.

Dimensions

mm (inch)

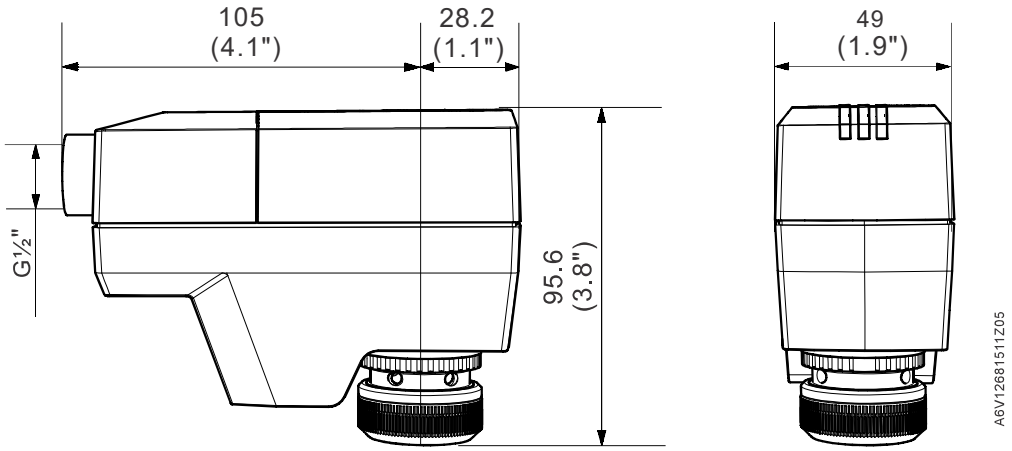

Revision numbers

Type	Valid from rev. no.
SSC131.09U	..A
SSC131.39U	..A
SSC161.05U	..A
SSC161.35U	..A

Issued by
Siemens Switzerland Ltd
Smart Infrastructure
Global Headquarters
Theilerstrasse 1a
CH-6300 Zug
+41 58 724 2424
www.siemens.com/buildingtechnologies

© Siemens 2023
Technical specifications and availability subject to change without notice.

Document ID A6V12681517_enUS_c

Edition 10/22/2024