# G240B-N Technical Data Sheet

5-year warranty

## Technical Data

| | |
|---|---|
| Fluid | chilled or hot water, up to 60% glycol, steam |
| Flow characteristic | modified equal percentage |
| Controllable flow range | stem up - open A – AB |
| Valve Size [mm] | 1.5” [40] |
| Pipe connection | NPT female ends |
| Housing | Bronze |
| Stem | stainless steel |
| Stem seal | EPDM O-ring |
| Seat | Bronze |
| Valve plug | brass |
| Body Pressure Rating | ANSI Class 250, up to 400 psi below 150°F |
| ANSI Class | 250 |
| Maximum Inlet Pressure (Steam) | 35 psi [241 kPa] |
| Max Differential Pressure (Steam) | 20 psi [103 kPa] |
| Rangeability Sv | 100:1 |
| Cv | 28 |
| Weight | 5.7 lb [2.6 kg] |
| Fluid Temp Range (water) | 20...280°F [-7...138°C] |
| Leakage rate | ANSI Class VI |
| Servicing | repack kits available |

## Flow/Mounting Details

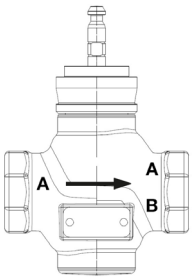


## Application

This valve is typically used in air handling units on heating or cooling coils, and fan coil unit heating or cooling coils. Some other common applications include unit ventilators, VAV box re-heat coils and bypass loops. This valve is suitable for use in hydronic systems with variable flow. Bronze and stainless steel trim valves can be used for steam applications, depending on actuator and close-off combinations.

### Suitable Actuators

| | Non-Spring | Spring | Electronic fail-safe |
|---|---|---|---|
| G240B-N | LVB(X) | NF | LVKB(X) |

## Dimensions (Inches [mm])

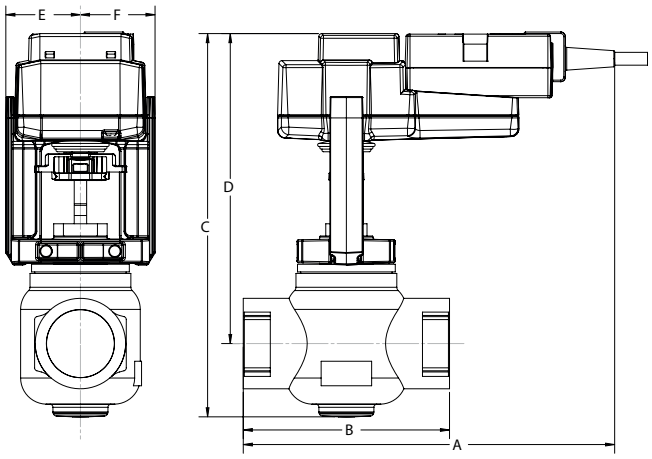


LV

| A | B | C | D | E | F |
|---|---|---|---|---|---|
| 9.6” [244] | 5.3” [135] | 9.9” [252] | 8.5” [216] | 1.9” [48] | |

## Safety Notes

WARNING: This product can expose you to lead which is known to the State of California to cause cancer and reproductive harm. For more information go to www.p65warnings.ca.gov

## Piping

The valves should be mounted in a weather-protected area in a location that is within the ambient limits of the actuator. Allow sufficient room for valve with actuator and for service. The G2 and G3 preferred mounting position of the valve is with the valve stem vertical above the valve body, for maximum life. However, the assemblies can be mounted with the valve stem vertical or horizontal in relation to the pipe. The actuators should never be mounted underneath the valve, as condensation can build up and result in a failure of the actuators.

Date created, 04/03/2020 - Subject to change. © Belimo Aircontrols (USA), Inc.

## Dimensions (Inches [mm])

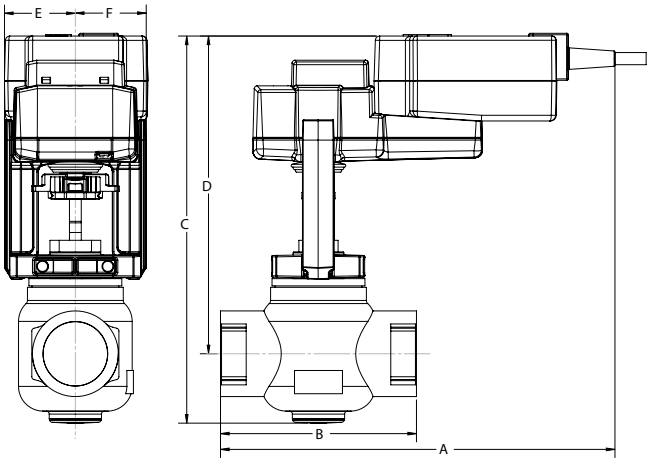


**LVK**

| A | B | C | D | E | F |
|---|---|---|---|---|---|
| 10.7” [273] | 5.3” [135] | 10.5” [267] | 8.6” [218] | 1.9” [48] | |

## Dimensions (Inches [mm])

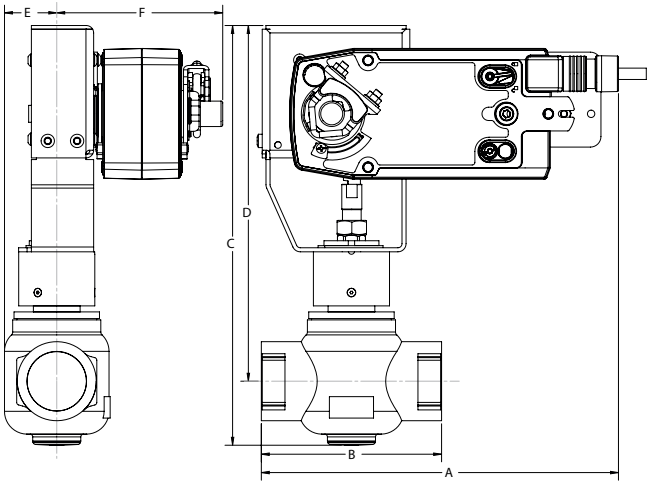


**NF**

| A | B | C | D | E | F |
|---|---|---|---|---|---|
| 10.5” [267] | 5.3” [135] | 12.4” [314] | 10.5” [267] | 1.5” [39] | 4.9” [125] |

Date created, 04/03/2020 - Subject to change. © Belimo Aircontrols (USA), Inc.

# LVKB24-MFT Technical Data Sheet

## Modulating, Fail-Safe Operation, Linear, 24 V, Multi-Function Technology®

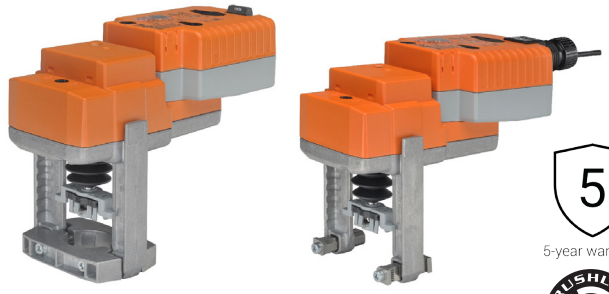

5-year warranty

| Technical Data | |
|---|---|
| Power Supply | 24 VAC, ±20%, 50/60 Hz, 24 VDC, ±10% |
| Power consumption in operation | 2.5 W |
| Power consumption in rest position | 1.5 W |
| Transformer sizing | 6 VA (class 2 power source) |
| Electrical Connection | 18 GA plenum cable, 3 ft [1 m], with 1/2" conduit connector, degree of protection NEMA 2 / IP54 |
| Overload Protection | electronic throughout full stroke |
| Electrical Protection | actuators are double insulated |
| Operating Range | 2...10 V (default), 4...20 mA w/ ZG-R01 (500 Ω, 1/4 W resistor), variable (VDC, PWM, on/off, floating point) |
| Operating range Y variable | Start point 0.5...30 V<br>End point 2.5...32 V |
| Input Impedance | 100 kΩ for 2...10 V (0.1 mA), 500 Ω for 4...20 mA, 1500 Ω for PWM, On/Off and Floating point |
| Position Feedback | 2...10 V |
| Stroke | 0.75" [19 mm] |
| Actuating force motor | 115 lbf [500 N] |
| Direction of motion motor | selectable with switch |
| Direction of motion fail-safe | reversible with switch |
| Position indication | Mechanically, with pointer |
| Manual override | 4 mm hex crank (shipped w/actuator) |
| Running Time (Motor) | 90 s constant, independent of load |
| Running time fail-safe | <35 s |
| Bridging time | 2 s delay before fail-safe activates |
| Pre-charging time | 5...20 s |
| Ambient humidity | max. 95% r.H., non-condensing |
| Ambient temperature | -22...122°F [-30...50°C] |
| Storage temperature | -40...176°F [-40...80°C] |
| Degree of Protection | IP54, NEMA 2, UL Enclosure Type 2 |
| Housing material | Die cast aluminium and plastic casing |
| Agency Listing | cULus acc. to UL60730-1A/-2-14, CAN/CSA E60730-1:02, CE acc. to 2004/108/EC and 2006/95/EC |
| Noise level, motor | 55 dB(A) |
| Noise level, fail-safe | 60 dB(A) |
| Servicing | maintenance-free |
| Quality Standard | ISO 9001 |
| Weight | 3.53 lb [1.6 kg] |

† Use flexible metal conduit. Push the listed conduit fitting device over the actuator's cable to butt against the enclosure. Screw in conduit connector. Jacket the actuators input wiring with listed flexible conduit. Properly terminate the conduit in a suitable junction box. Rated impulse Voltage 800V. Type of action 1. Control pollution degree 3.

†Rated Impulse Voltage 800V, Type of action 1.AA, Control Pollution Degree 3

Date created, 12/20/2019 - Subject to change. © Belimo Aircontrols (USA), Inc.

## Wiring Diagrams

### INSTALLATION NOTES

2 Actuators may be connected in parallel. Power consumption and input impedance must be observed.

3 Actuators may also be powered by 24 VDC.

7 A 500 Ω resistor (ZG-R01) converts the 4 to 20 mA control signal to 2 to 10 VDC.

8 Control signal may be pulsed from either the Hot (Source) or Common (Sink) 24 VAC line.

9 For triac sink the common connection from the actuator must be connected to the hot connection of the controller. Contact closures A & B also can be triacs. A & B should both be closed for the triac source and open for triac sink.

18 Actuators with plenum cable do not have numbers; use color codes instead.

Meets cULus requirements without the need of an electrical ground connection.

### WARNING! LIVE ELECTRICAL COMPONENTS!

During installation, testing, servicing and troubleshooting of this product, it may be necessary to work with live electrical components. Have a qualified licensed electrician or other individual who has been properly trained in handling live electrical components perform these tasks. Failure to follow all electrical safety precautions when exposed to live electrical components could result in death or serious injury.

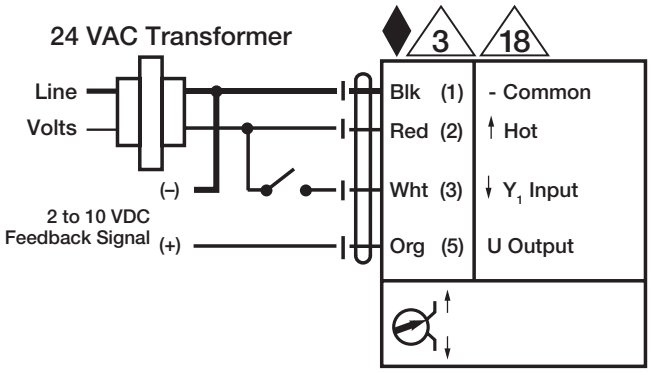


**On/Off**

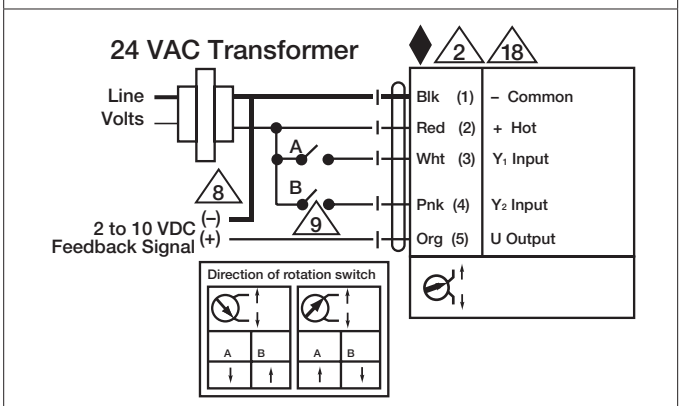


**Floating Point**

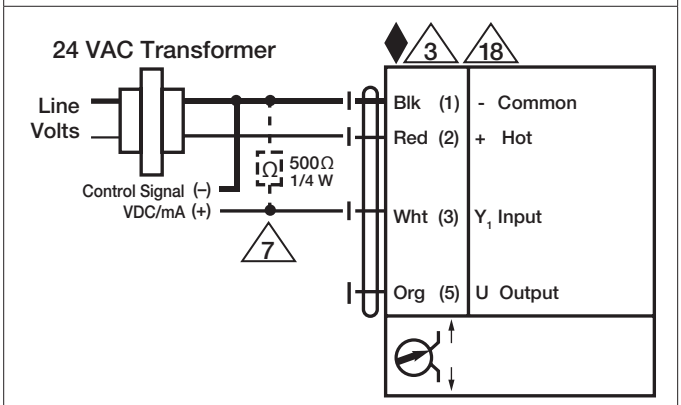


**VDC / 4 to 20 mA**

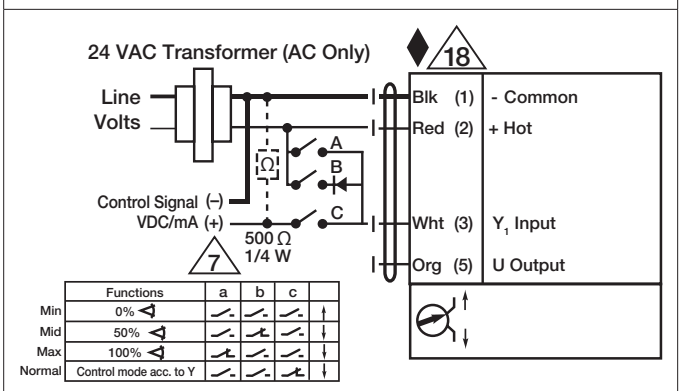


**Override Control Min, Mid, Max Positions**

Date created, 12/20/2019 - Subject to change. © Belimo Aircontrols (USA), Inc.