CHARLOTTE
PIPE AND FOUNDRY COMPANY®

No-Hub

List Price Schedule NH-422
Effective April 1, 2022
(Updated November 13, 2025)
Supersedes Price Schedule NH-122

Possession of this price list shall not be construed as an offer to sell the products listed.
Charlotte Pipe and "You can't beat the system" are registered trademarks of Charlotte Pipe and Foundry Company.
©1963-2025 Charlotte Pipe and Foundry Company

MADE IN USA

ASTM A 888 & CISPI 301

>> No-Hub (Hubless) Cast Iron Soil Pipe and Fittings

Please contact Customer Service or refer to Excel and HTML price sheets on www.charlottepipe.com for crate and half-crate quantities.

Part No. NH 1
No-Hub (Standard) Coupling

Size	*UPC# 611942-	Weight	List Price Each
1½	00097	.2	NHC
2x1½	00099	.4	NHC
2	00098	.3	NHC
3x2	00101	.4	NHC
3	00100	.3	NHC
4x3	00103	.8	NHC
4	00102	.7	NHC
5	00104	.9	NHC
6	00105	1.0	NHC
8	00106	1.4	NHC
10	00107	1.7	NHC

Part No. MDC 2
Heavy Duty (MD) Coupling

Size	*UPC# 611942-	Weight	List Price Each
1½	13907	.4	MDC
2	13908	.5	MDC
3	13909	.6	MDC
4	13910	.8	MDC
5	13911	1.3	MDC
6	13912	1.6	MDC
8	13913	1.7	MDC
10	13914	2.1	MDC

NHC > Please see list price in No-Hub (Standard) Couplings price sheet.
MDC > Please see list price in Heavy Duty (MD) Couplings price sheet.
SDC > Please see list price in Heavy Duty (HD) Couplings price sheet.

See page 15 for pipe bundle quantities.

Charlotte Pipe® products are manufactured to the applicable ASTM standard. Charlotte Pipe and Foundry cannot accept responsibility for the performance, dimensional accuracy, or compatibility of pipe, fittings, gaskets, or couplings not manufactured or sold by Charlotte Pipe and Foundry.

Part No. SDC 4
Heavy Duty (HD) Coupling

Size	*UPC# 611942-	Weight	List Price Each
1½	11512	.5	SDC
2	11513	.6	SDC
3	11514	.7	SDC
4	11515	.9	SDC
5	11516	1.5	SDC
6	11517	1.7	SDC
8	11518	2.1	SDC
10	11519	2.5	SDC

Part No. HD 1
Heavy Duty Coupling

Size	*UPC# 611942-	Weight	List Price Each
12	09632	3.4	SDC
15	09633	4.1	SDC

Part No. NH 2
No-Hub Pipe

Size	*UPC# 611942-	Weight	List Price Each
1½"x10'	00128	28.5	**$231.40**
2"x10'	00129	35.0	**231.90**
3"x10'	00130	54.0	**320.70**
4"x10'	00131	76.0	**416.20**
5"x10'	00132	97.6	**598.80**
6"x10'	00133	117.8	**715.60**
8"x10'	00134	170.9	**1,112.60**
10"x10'	00135	254.6	**1,890.50**
12"x10'	09606	318.1	**2,746.20**
15"x10'	09607	492.6	**4,013.30**

Charlotte Pipe requires that its hubless cast iron pipe and fittings be joined only with shielded hubless couplings manufactured in accordance with CISPI 310, ASTM C 1277 and certified by NSF® International or with Heavy Duty Couplings meeting ASTM C 1540. Failures in installations using couplings not supplied by Charlotte Pipe® are not the responsibility of this Company.

You can't beat the system.®

PO BOX 35430 CHARLOTTE, NORTH CAROLINA 28235
SALES PHONE (704) 348 6450 (800) 572 4199
TECHNICAL PHONE (800) 438 6091 FAX (800) 553 1605
WWW.CHARLOTTEPIPE.COM

Part No. NH 4 Quarter Bend

Size	*UPC# 611942-	Weight	List Price Each
1½	00136	1.6	**$31.40**
2	00137	2.3	**34.20**
3	00141	4.4	**47.90**
4	00146	7.3	**70.60**
5	00148	9.9	**159.10**
6	00149	13.7	**176.40**
8	00150	20.6	**479.80**
4x3 Reducing Increasing	00147	5.4	**143.40**

Part No. NH 4 Long Quarter Bend

Size	*UPC# 611942-	Weight	List Price Each
2x12	00138	5.4	**$96.40**
2x18	00139	8.6	**148.10**
2x24	00140	10.6	**194.70**
3x12	00142	7.5	**163.40**
4x12	00144	11.3	**242.40**

Part No. NH 4 A Tapped Quarter Bend

Size	*UPC# 611942-	Weight	List Price Each
1½x1½	00152	1.9	**$42.50**
2x1¼	00153	2.1	**46.10**
2x1½	00154	1.8	**39.60**
2x2	00155	2.8	**58.20**

Part No. NH 6 Quarter Bend with 2″ Side Inlet

Size	*UPC# 611942-	Weight	List Price Each
3	00156	5.1	**$96.60**
4	00157	7.5	**158.10**

Part No. NH 8 Quarter Bend with 2″ Heel Inlet

Size	*UPC# 611942-	Weight	List Price Each
3	00158	5.5	**$75.60**
4	00159	7.1	**96.40**

Part No. NH 8 A Double Quarter Bend

Size	*UPC# 611942-	Weight	List Price Each
2	00160	4.4	**$77.20**
3	00161	6.9	**124.10**
4	00162	9.3	**163.30**

N = Non-stock item; Contact customer service for availability.

Part No. NH 8 B Quarter Bend with Extended Low Heel Inlet

Size	*UPC# 611942-	Weight	List Price Each
3x2	12024	8.0	**$134.10 N**

Part No. NH 9 Fifth Bend

Size	*UPC# 611942-	Weight	List Price Each
2	12025	2.3	**$55.50 N**
3	12026	3.7	**78.80 N**
4	00165	5.7	**123.40**

Part No. NH 10 Sixth Bend

Size	*UPC# 611942-	Weight	List Price Each
2	00166	2.2	**$36.00**
3	00167	3.0	**46.60**
4	00168	5.4	**62.40**

Part No. NH 12 Eighth Bend

Size	*UPC# 611942-	Weight	List Price Each
1½	00169	1.5	**$26.10**
2	00170	1.8	**29.50**
3	00173	3.0	**39.60**
4	00176	3.7	**51.90**
5	00178	7.2	**107.90**
6	00179	8.6	**114.80**
8	00180	14.9	**330.60**
10	00181	30.8	**628.40**
12	09608	42.0	**1,270.40**
15	09609	63.4	**2,534.00**
2x6 Long	12104	2.4	**93.10 N**
2x12 Long	00171	4.5	**92.10**
2x18 Long	00172	7.3	**137.30**
3x12 Long	00174	7.4	**145.60**
3x18 Long	00175	10.2	**230.00**
4x12 Long	00177	9.6	**228.60**

Part No. NH 14 Sixteenth Bend

Size	*UPC# 611942-	Weight	List Price Each
1½	00182	1.2	**$27.60**
2	00183	1.4	**30.10**
3	00184	2.2	**35.10**
4	00185	3.3	**46.40**
5	00186	5.1	**102.60**
6	00187	6.5	**124.10**
8	00188	11.4	**197.40**

Part No. NH 16 Short Sweep

Size	*UPC# 611942-	Weight	List Price Each
2	00189	3.8	**$47.80**
3	00190	6.5	**62.40**
4	00191	8.5	**110.40**
5	00192	12.7	**193.40**
6	00193	16.7	**203.20**
8	00194	27.4	**525.90**
10	00195	50.9	**959.40**
12	09621	61.3	**2,995.80**
15	09622	105.6	**3,924.00**

Part No. EZS 14 Extended Short Sweep

Size	*UPC# 611942-	Weight	List Price Each
2x18	04448	7.9	**$200.60**
2x24	04444	10.8	**220.90**
2x34	04449	14.0	**372.90**

Part No. NH 18 Long Sweep

Size	*UPC# 611942-	Weight	List Price Each
1½	00198	4.6	**$80.00**
2	00199	5.7	**74.70**
3	00201	9.3	**90.40**
4	00203	11.8	**143.80**
5	00204	18.2	**260.10**
6	00205	23.2	**317.90**
4x3 Reducing Increasing	00202	12.4	**288.50**

⚠ WARNING

Testing with or use of compressed air or gas in Cast Iron pipe or fittings can result in explosive failures and cause severe injury or death.

- NEVER test with or transport/store compressed air or gas in Cast Iron pipe or fittings.
- NEVER test Cast Iron pipe or fittings with compressed air or gas.
- ONLY use Cast Iron pipe and fittings for drain, waste and vent or sanitary sewer applications.

Part No. NH 20 Wye

Size	*UPC# 611942-	Weight	List Price Each
1½	00207	2.5	**$44.60**
2	00208	3.3	**43.60**
3x1½	00215	4.4	**56.70**
3x2	00216	4.4	**47.20**
3	00209	4.4	**63.60**
4x2	00217	4.7	**67.60**
4x3	00218	7.5	**88.50**
4	00210	9.4	**101.80**
5x2	00220	8.6	**149.50**
5x3	00221	10.3	**209.80**
5x4	00219	12.5	**215.80**
5	00211	14.8	**241.20**
6x2	00225	9.4	**166.40**
6x3	00224	12.1	**209.80**
6x4	00223	13.9	**215.80**
6x5	00222	17.1	**262.00**
6	00212	19.0	**270.70**
8x3	00227	17.2	**338.90**
8x4	00228	21.3	**371.30**
8x5	00229	23.5	**449.80**
8x6	00230	28.1	**456.70**
8	00213	33.3	**637.30**
10x4	00231	33.1	**980.80**
10x6	00232	42.3	**1,026.60**
10x8	00233	56.8	**1,232.00**
10	00214	75.4	**1,414.40**
12	09619	97.0	**2,785.50**
15	09620	189.5	**6,479.30**

Part No. NH 21 Double Wye

Size	*UPC# 611942-	Weight	List Price Each
2	00234	4.5	**$69.30**
3x2	00241	5.5	**107.90**
3	00235	8.0	**127.80**
4x2	00242	6.9	**143.40**
4x3	00243	8.7	**162.10**
4	00236	11.9	**259.60**
5x4	00244	14.9	**344.40**
6x4	00245	16.2	**370.20**
6	00237	27.4	**458.20**
8	00238	47.5	**1,349.80**
8x4	00246	23.1	**653.60**
8x6	00247	31.7	**889.50**

Part No. NH 21 A
Upright Wye

Size	*UPC# 611942-	Weight	List Price Each
2	00248	4.6	**$76.60**
3x2	00251	5.6	**75.10**
3	00249	9.4	**104.80**
4x2	00252	7.4	**105.30**
4x3	00253	10.1	**140.00**
4	00250	12.5	**277.20**
5x2	04428	9.5	**455.30**
5	04740	20.9	**519.30**

Part No. NH 22
Combination Wye and Eighth Bend

Size	*UPC# 611942-	Weight	List Price Each
1½	00260	3.1	**$47.50**
2x1½	00267	3.5	**52.90**
2	00261	4.1	**49.80**
3x1½	00268	5.2	**82.70**
3x2	00269	5.5	**62.40**
3	00262	8.1	**78.40**
4x2	00271	6.8	**81.20**
4x3	00272	9.4	**115.50**
4	00263	14.2	**151.40**
5x2	00273	8.6	**209.10**
5x3	00274	12.6	**257.80**
5x4	00275	16.7	**284.80**
5	00264	19.5	**308.80**
6x2	00276	10.9	**209.80**
6x3	00277	14.8	**254.60**
6x4	00278	18.3	**243.60**
6x5	00279	22.4	**332.70**
6	00265	29.7	**414.50**
8x4	00280	24.9	**505.20**
8x6	00281	34.2	**755.60**
8	00266	42.6	**969.50**

Part No. EZS 15
Extended Combination

Size	*UPC# 611942-	Weight	List Price Each
2x24	04453	11.9	**$257.50**
2x36	04450	15.3	**419.10**

How To Determine Right Or Left Hand Inlets:

For All Branch Fittings.
Place the spigot near you with the branch facing upward.

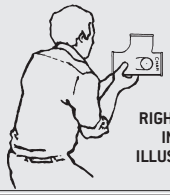

RIGHT HAND INLET ILLUSTRATED

Part No. NH 24
Double Combination

Size	*UPC# 611942-	Weight	List Price Each
2	00284	6.7	**$118.50**
3x2	00287	7.9	**155.20**
3	00285	11.7	**182.40**
4x2	00290	8.5	**226.50**
4x3	00291	13.7	**237.60**
4	00286	20.0	**358.60**

Part No. NH 26
Tapped Wye

Size	*UPC# 611942-	Weight	List Price Each
2x1½	00295	3.4	**$101.80**
2x2	04421	4.6	**110.10**
3x1½	00296	4.6	**110.90**
3x2	00297	5.5	**125.30**
4x1½	00298	6.0	**124.10**
4x2	00299	6.9	**137.20**

Part No. NH 27
Tapped Double Wye

Size	*UPC# 611942-	Weight	List Price Each
2x1½	00300	5.5	**$202.40**

Part No. NH 28
Sanitary Tee

Size	*UPC# 611942-	Weight	List Price Each
1½	00301	2.9	**$44.10**
2x1½	00308	3.3	**47.80**
2	00302	3.4	**47.20**
3x1½	00309	4.4	**55.90**
3x2	00310	4.3	**51.60**
3	00303	5.4	**58.20**
4x2	00312	6.0	**74.00**
4x3	00313	7.3	**84.70**
4	00304	8.1	**110.20**
5x2	00314	8.1	**184.10**
5x3	00315	10.1	**193.40**
5x4	00316	11.3	**199.10**
5	00305	12.1	**257.40**
6x2	00317	9.3	**190.20**
6x3	00318	11.2	**193.40**
6x4	00319	11.6	**199.10**
6x5	00320	16.5	**322.50**
6	00306	13.6	**262.40**
8x3	00321	18.3	**546.60**
8x4	00322	21.7	**561.10**
8x5	00323	22.7	**653.60**
8x6	00324	24.1	**613.40**
8	00307	30.3	**1,063.90**

Part No. EZS 16
Two-Way Sanitary Tee

Size	*UPC# 611942-	Weight	List Price Each
2x18	04872	7.8	**$173.90**
2x24	04451	10.4	**209.10**
2x36	14095	13.7	**247.40**

Part No. NH 30
Sanitary Cross

Size	*UPC# 611942-	Weight	List Price Each
1½	00326	3.7	**$66.70**
2	00327	4.9	**80.40**
3x2	00332	6.1	**110.60**
3	00328	7.6	**123.90**
4x2	00334	7.2	**158.00**
4x3	00335	8.6	**190.60**
4	00329	10.6	**234.60**
5x4	00336	13.7	**349.80**
6x4	00338	14.5	**338.90**
6	00330	21.8	**511.90**
8x4	00339	22.0	**820.00**
8	00331	38.7	**1,182.10**

Illustration Shows Right Hand

Part No. NH 31
Sanitary Tee
(New Orleans Code, with 2″ 90° Sanitary Inlet Above Center)

Size	*UPC# 611942-	Weight	List Price Each
3x3 w/LH	00341	6.8	**$200.20**
3x3 w/RH	00342	6.3	**200.20**
4x4 w/LH	00345	8.7	**280.40**
4x4 w/RH	00344	8.4	**280.40**

Part No. NH 32
Sanitary Tee
(with 2″ Right and Left Side Inlets)

Size	*UPC# 611942-	Weight	List Price Each
4x4 w/RH & LH	00358	10.9	**$355.30**

Illustration Shows Left Hand

Part No. NH 32 B
Sanitary Tee
(New Orleans Code, with 2″ 45° Sanitary Inlet Above Center)

Size	*UPC# 611942-	Weight	List Price Each
3 w/2 LH	00362	8.3	**$308.00**
3 w/2 RH	00363	7.8	**308.00**
3 w/2 RH & LH	00366	9.1	**596.60**
4 w/2 LH	00365	10.7	**470.50**
4 w/2 RH	00364	10.7	**470.50**

Part No. NH 33 A
Sanitary Cross
(New Orleans Code, with 2″ 90° Sanitary Inlet Above Center)

Size	*UPC# 611942-	Weight	List Price Each
4	00382	10.7	**$355.40**

Part No. NH 33 C
Sanitary Cross
(New Orleans Code, with 2″ 90° Sanitary Inlets Right and Left Above Center)

Size	*UPC# 611942-	Weight	List Price Each
3 w/2RH & LH	00385	9.2	**$328.20**
4 w/2 RH & LH	00386	11.9	**412.70**

Part No. NH 33 F
Sanitary Cross
(New Orleans Code, with Two 2″ 45° Sanitary Inlets Same Side)

Size	*UPC# 611942-	Weight	List Price Each
3	00389	10.2	**$434.20**
4	00390	13.6	**580.40**

Part No. NH 33 G
Sanitary Cross
(with 3″ Vent and Two 2″ 45° Inlets)

Size	*UPC# 611942-	Weight	List Price Each
4x3x4x2x2	00391	20.3	**$837.30**

Part No. NH 34
Sanitary Tapped Tee

Size	*UPC# 611942-	Weight	List Price Each
1½x1¼	00402	2.3	**$61.10**
1½x1½	00403	2.5	**58.20**
2x1¼	00404	2.8	**58.20**
2x1½	00405	2.8	**51.60**
2x2	00407	3.7	**59.30**
3x1¼	00408	3.7	**72.60**
3x1½	00409	3.5	**70.20**
3x2	00412	4.8	**82.20**
3x3	00413	6.9	**151.90**
4x1¼	00414	3.9	**93.60**
4x1½	00415	4.7	**72.90**
4x2	00417	5.8	**82.70**
4x3	00419	10.0	**135.40**
5x1½	00420	6.5	**172.20**
5x2	00421	8.8	**199.60**
6x1½	00422	8.1	**196.40**
6x2	00423	9.2	**207.80**

Part No. EZS 17
2″ x 22⅞″ Extended Tapped Sanitary Tee

Size	*UPC# 611942-	Weight	List Price Each
2x1½	04454	9.5	**$176.70**
2x2	04455	9.0	**176.70**

Part No. EZS 27
Sanitary Tapped Tee

Size	*UPC# 611942-	Weight	List Price Each
2x1½x31	04460	12.8	**$398.50**
2x2x31	04462	13.8	**398.50**

Part No. NH 35
Sanitary Tapped Cross

Size	*UPC# 611942-	Weight	List Price Each
1½x1½	00426	3.4	**$73.30**
2x1¼	00427	3.8	**78.80**
2x1½	00428	3.8	**71.90**
2x2	00429	5.3	**85.20**
3x1½	00431	4.4	**97.30**
3x2	00432	6.1	**110.10**
4x1½	00434	5.4	**121.50**
4x2	00435	6.9	**155.60**

Part No. EZS 18
2″ x 22⅞″ Extended Tapped Sanitary Cross

Size	*UPC# 611942-	Weight	List Price Each
2x1½	04456	11.1	**$193.40**
2x2	04457	11.8	**208.80**

Part No. EZS 28
Sanitary Tapped Cross

Size	*UPC# 611942-	Weight	List Price Each
2x1½x31	04464	14.2	**$398.50**
2x2x31	04466	14.5	**411.40**

Part No. NH 35 B
Double Vertical Sanitary Tapped Tee

Size	*UPC# 611942-	Weight	List Price Each
2x1½	00441	4.8	**$115.40**

Part No. NH 36
Test Tee <u>Less Brass Plug</u>

Size	IPS TAP	*UPC# 611942-	Weight	List Price Each
2	2	00443	2.8	**$42.60**
3	3	00444	5.6	**70.10**
4	4	00445	8.9	**123.10**
5	5	00446	14.9	**253.10**
6	6	00447	21.4	**269.10**
8	8	00448	33.1	**687.10**
10	10	00449	56.2	**1,283.10**

Part No. NH 36 S
Test Tee with Southern Raised-Head Brass Plug Installed

Size	IPS TAP	*UPC# 611942-	Weight	List Price Each
2	2	00473	3.1	**$79.40**
3	3	00474	6.1	**132.90**
4	4	00475	10.0	**225.50**
5	5	00476	16.2	**414.50**
6	6	00477	23.6	**605.90**
8	8	04158	37.3	**1,156.20**

Part No. NH 40
Increaser-Reducer

Size	*UPC# 611942-	Weight	List Price Each
2x3	00491	3.3	**$58.70**
2x4	00492	4.4	**100.70**
3x4	00493	5.0	**78.90**

Test Tee with plugs installed can be ordered <u>only</u> as shown in the catalog. When ordering Test Tees with plugs other than Southern Code, please order the fitting less plug, then order the plug from the Plugs price sheet, page one.

Example:

<u>Part No.</u>	<u>Quantity</u>	<u>Description</u>
NH 36	4	4″ Test Tee
PLG 410	4	4″ Ohio Plug

When Test Tees with plugs other than Southern Code are ordered, <u>the plugs will be packed separately in a burlap bag inside shipping crate.</u>

Part No. NH 40 A
Short Reducer

Size	*UPC# 611942-	Weight	List Price Each
2x1½	00494	1.1	**$24.80**
3x1½	00495	1.6	**39.90**
3x2	00496	1.8	**24.60**
4x2	00497	2.2	**37.20**
4x3	00498	2.2	**37.20**
5x2	00499	3.3	**68.00**
5x3	00500	3.6	**69.30**
5x4	00501	3.1	**71.90**
6x2	00502	4.0	**102.60**
6x3	00503	3.9	**100.10**
6x4	00504	3.9	**100.10**
6x5	00505	4.3	**102.60**
8x2	00506	6.9	**158.60**
8x3	00507	7.1	**146.90**
8x4	00508	7.8	**154.50**
8x5	00509	7.4	**174.50**
8x6	00510	7.9	**171.90**
10x4	00511	13.8	**303.50**
10x6	00512	13.3	**320.80**
10x8	00513	14.7	**376.10**
12x4	09610	18.4	**628.10**
12x6	09611	18.0	**672.80**
12x8	09612	17.1	**692.00**
12x10	09613	18.9	**703.40**
15x4	09614	33.0	**1,356.50**
15x6	09615	32.3	**1,280.60**
15x8	09616	32.2	**1,473.60**
15x10	09617	31.8	**1,527.20**
15x12	09618	30.4	**1,496.70**

Part No. NH 42
P Trap

Size	*UPC# 611942-	Weight	List Price Each
1½	00514	3.1	**$52.90**
2	00515	4.6	**49.80**
3	00516	8.4	**109.30**
4	00517	15.7	**193.40**
6	00518	32.8	**469.10**
2x12 Long	00519	6.2	**133.30**
2x18 Long	00520	8.0	**166.40**

Part No. NH 42 A
P Trap, Reducing

Size	*UPC# 611942-	Weight	List Price Each
3x2	12030	9.0	**$249.10 N**

Part No. NH 42 B
P Trap with ½″ Tap in Heel

Size	*UPC# 611942-	Weight	List Price Each
6	13917	32.5	**$779.30 N**

Part No. NH 43
P Trap with ½″ Tap in Heel

Size	*UPC# 611942-	Weight	List Price Each
2	00531	5.0	**$112.90**
3	00532	10.8	**178.80**
4	00533	15.3	**314.00**

(Right Hand Illustration)

Part No. EZS 9
P Trap with 1½″ Tapped Side Inlet

Size	*UPC# 611942-	Weight	List Price Each
2 LH	04446	6.3	**$120.90**
2 RH	04445	6.3	**120.90**

(Right Hand Illustration)

Part No. EZS 10
P Trap with 2″ No-Hub Side Inlet

Size	*UPC# 611942-	Weight	List Price Each
2 LH	10883	6.4	**$131.40**
2 RH	10882	6.4	**131.40**

Part No. NH 44
P Trap with Tapped Inlet

Size	*UPC# 611942-	Weight	List Price Each
2x1½	00538	4.5	**103.10**
2x2	00540	5.5	**114.00**

Part No. NH 44 A
Deep Seal P Trap

Size	*UPC# 611942-	Weight	List Price Each
2	00541	7.0	**$116.60**
3	00542	10.9	**187.80**
4	00543	18.0	**298.40**

Part No. NH 45
Running Trap with Vent

Size	*UPC# 611942-	Weight	List Price Each
4	00545	20.0	**$327.20**

N = Non-stock item; Contact customer service for availability.

Part No. NH 45 A
Running Trap with Double Vent

Size	*UPC# 611942-	Weight	List Price Each
4	00546	20.7	**$413.20**

Part No. EZS 13
45° Vented Tub Wye

Size	*UPC# 611942-	Weight	List Price Each
2	04447	10.0	**$219.20**

Part No. EZS 38
Vented Tub Wye

Size	*UPC# 611942-	Weight	List Price Each
2x15	04467	9.5	**$219.10**
2x29½	04474	14.0	**359.60**

Part No. EZS 38 L
Vented Tub Wye
(Left Hand)

Size	*UPC# 611942-	Weight	List Price Each
2	04469	9.4	**$234.80**

Part No. EZS 38 R
Vented Tub Wye
(Right Hand)

Size	*UPC# 611942-	Weight	List Price Each
2	04468	9.0	**$234.80**

Part No. NH 48
Tapped Adapters

Size	*UPC# 611942-	Weight	List Price Each
1½x1½	00554	1.2	**$38.00**
2x1¼	00555	1.0	**52.40**
2x1½	00556	0.9	**39.30**
2x2	00557	1.7	**39.30**
3x2	00560	1.2	**41.10**

Part No. NH 50
Blind Plug

Size	*UPC# 611942-	Weight	List Price Each
1½	00561	0.6	**$17.10**
2	00562	0.6	**17.20**
3	00563	1.1	**24.80**
4	00564	2.0	**39.30**
5	00565	2.9	**71.90**
6	00566	3.2	**75.10**
8	00567	6.3	**199.30**
10	00568	12.7	**293.90**
12	09623	17.9	**465.60**
15	09624	30.4	**799.50**

N = Non-stock item; Contact customer service for availability.

Tapped Ferrule with plugs installed can be ordered only as shown in the catalog. When ordering Tapped Ferrules with plugs other than Southern Code, please order the fitting less plug, then order the plug from the Plugs price sheet.

Example:

Part No.	Quantity	Description
NH 52	4	4″ Tapped Ferrule
PLG 410	4	3½″ Ohio Plug

When Tapped Ferrule with plugs other than Southern Code are ordered, the plugs will be packed separately in a burlap bag inside the shipping crate.

Part No. NH 52
Tapped Ferrule Less Brass Plug

IPS TAP				
2	1½	00570	0.9	**$32.20**
3	2½	00571	1.9	**36.80**
4	3½	00572	2.4	**40.90**
5	4	00573	6.0	**97.10**
6	5	00574	7.8	**91.60**
8	6	00575	11.4	**220.90**

Part No. NH 52 S
Tapped Ferrule with Southern Raised-Head Brass Plug Installed

IPS TAP				
2	1½	00597	1.0	**$69.30**
3	2½	00598	2.3	**88.40**
4	3½	00599	3.1	**121.40**
5	4	00600	6.9	**190.60**
6	5	00601	9.1	**253.50**
8	6	00602	13.7	**557.80**

Part No. NH 53
Single Two-Way Cleanout

4	00617	15.8	**$348.80**

Part No. NH 53 A
Double Two-Way Cleanout

4	00618	15.4	**$319.40**

Part No. NH 54
Two-Way Baffle Cleanout

3x3x4	12032	15.1	**$458.40 N**
4x4x4	12033	24.2	**443.90**

Part No. NH 56
Notched and Slotted Closet Collar

Size	Connects To	*UPC# 611942-	Weight	List Price Each
4x3x3½	3″ Pipe	00620	3.3	**$70.40**
4x3x8	3″ Pipe	04777	6.0	**154.10**
4x4x4	4″ Pipe	04762	4.8	**82.20**
4x4x8	4″ Pipe	00621	7.2	**198.10**

Part No. NH 57
Horizontal Twin Tapped Tee

Size	*UPC# 611942-	Weight	List Price Each
3x1½	00622	7.1	**$201.90**
4x1½	00623	7.5	**204.00**

Illustration Shows Left Hand

Part No. NH 457
Vented Closet Tee with 2″ Top Vent
(Left Hand or Right Hand; Designed for use below the floor; Fitting does not require a baffle.)

Size	*UPC# 611942-	Weight	List Price Each
4x4x2x4 LH	00626	11.9	**$274.00**
4x4x2x4 RH	00625	11.6	**274.00**

Illustration Shows Left Hand

Part No. NH 458
Vented Closet Tee with 2″ Top Vent and 2″ Side Inlet
(Left Hand or Right Hand; Designed for use below the floor; Fitting does not require a baffle.)

Size	*UPC# 611942-	Weight	List Price Each
4x4x2x2x4 LH	00628	12.3	**$326.70**
4x4x2x2x4 RH	00627	12.1	**326.70**

Gray Area Indicates A Baffle

Part No. NH 463
Vented Closet Cross with Top Vent
(Designed for use below the floor; Fitting has a baffle.)

Size	*UPC# 611942-	Weight	List Price Each
4x4x2x4x4	00631	15.2	**$385.30**

Gray Area Indicates A Baffle

Part No. NH 464
Vented Closet Cross with 2″ Top Vent and 2″ Side Inlet
(Designed for use below the floor; Fitting has a baffle.)

Size	*UPC# 611942-	Weight	List Price Each
4x4x2x2x4x4	00633	15.4	**$440.10**

Top View

Fitting Has A Baffle

Part No. NH 502
No-Hub Prison Fitting with 2″ Top Vent with or without 2″ 45° Tap
(Designed for use above the floor; Baffle helps prevent passage of contraband between cells; 12" Laying Length)

Size		*UPC# 611942-	Weight	List Price Each
4	Less Tap	00639	22.2	**$1,051.50**
4	With Tap	00640	21.8	**1,101.30**
4x3	Less Tap	11119	23.5	**1,305.60**
4x3	With Tap	11120	22.9	**1,367.40**

Part No. EZS 50*
10″ Closet Fitting with 2″ Inlet
(Double, Left Hand or Right Hand; Designed for use below the floor; Fitting does not have a baffle.)

FLOOR / CEILING

Illustration Shows Left Hand

Size		*UPC# 611942-	Weight	List Price Each
4	EZS 50 D**	04484	13.4	**$495.80**
4	EZS 50 L	04476	12.2	**350.10**
4	EZS 50 R	04477	12.2	**350.10**

Part No. EZS 51*
10″ Closet Fitting with 2″ Inlet and 2″ Side Inlet
(Double, Left Hand or Right Hand; Designed for use below the floor; Fitting does not have a baffle.)

FLOOR / CEILING

Illustration Shows Left Hand

Size		*UPC# 611942-	Weight	List Price Each
4	EZS 51 D**	04424	13.9	**$563.90**
4	EZS 51 L	04425	12.5	**418.50**
4	EZS 51 R	04473	12.6	**418.50**

***When ordering please specify Double, Left or Right.**
****Double closet fitting does not have a baffle.**

For use with EZS50 thru 800 Series fittings.
Specify Plain, Double, Left or Right

Note: Our crossovers are designed for use with EZS starter fittings, that is for the vent and stack centerline to be 6½″

Part No. EZS 7
2″ Vent Cross-Over Plain
(No Inlets)

Size	*UPC# 611942-	Weight	List Price Each
2x18⅜	04429	8.1	**$133.30**

Part No. EZS 7 D
2″ Vent Cross-Over Double
(2 Inlets)

Size	*UPC# 611942-	Weight	List Price Each
2x18⅜	04430	8.1	**$167.50**

Part No. EZS 7 L
2″ Vent Cross-Over
Left Hand Inlet

Size	*UPC# 611942-	Weight	List Price Each
2x18⅜	04431	8.2	**$143.90**

Part No. EZS 7 R
2″ Vent Cross-Over
Right Hand Inlet

Size	*UPC# 611942-	Weight	List Price Each
2x18⅜	04432	8.3	**$143.90**

How To Determine Right Or Left Hand Fitting

With the vented end toward you, hold the fitting so that you are looking into its length with the curved side up. If the vent is on your left side, it is a Left hand fitting. If the vent is on your right side, it is a Right hand fitting.

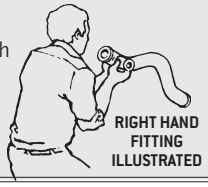

Part No. EZS 1
Figure One

Size	*UPC# 611942-	Weight	List Price Each
2x1½	04761	4.5	**$117.80**

N = Non-stock item; Contact customer service for availability.

Part No. NH 25
Figure Five Double Fixture Fitting

Size	*UPC# 611942-	Weight	List Price Each
2	12027	6.0	**$114.40**
3	10222	12.5	**284.70**
3x2x3x3 Reducing	12028	10.8	**275.90 N**
4	10223	22.3	**463.20**
4x2x4x4 Reducing	12029	19.5	**441.20 N**

Part No. EZS 6*
Figure Six
(Double, Left Hand or Right Hand; Designed for use below the floor; Double fitting has a baffle.)

Part No.	Size	*UPC# 611942-	Weight	List Price Each
EZS 6 D	3x2	12086	13.0	**$509.30 N**
EZS 6 D	4x2	12089	23.1	**534.20 N**
EZS 6 L	3x2	12084	11.4	**268.80 N**
EZS 6 L	4x2	12087	18.0	**306.10 N**
EZS 6 R	3x2	12085	11.4	**268.80 N**
EZS 6 R	4x2	12088	18.0	**306.10 N**

Part No. EZS 8*
Figure Eight
(Double, Left Hand or Right Hand; Designed for use below the floor; Double fitting has a baffle.)

Part No.	Size	*UPC# 611942-	Weight	List Price Each
EZS 8 D	3x2	12092	13.0	**$781.80 N**
EZS 8 L	3x2	12090	12.5	**415.60 N**
EZS 8 L	4x2	12093	19.8	**576.10 N**
EZS 8 R	3x2	12091	12.5	**415.60 N**
EZS 8 R	4x2	12094	19.8	**576.10 N**

Part No. EZS 8 A
Figure Eight Double Fixture Fitting, Extended

Part No.	Size	*UPC# 611942-	Weight	List Price Each
EZS 8 A	4x2	12031	22.3	**$781.80 N**

***When ordering please specify Double, Left or Right.**

Part No. EZS 100*
16″ Closet Fitting with 2″ Inlets
(Double, Left Hand or Right Hand; Designed for use below the floor.)

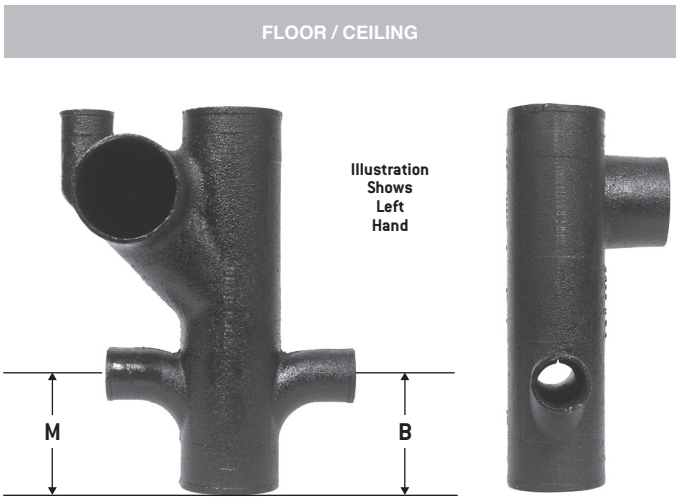

Part No.	Size	M Inlet	B Inlet	*UPC# 611942-	Weight	List Price Each
EZS 100 D	4x16	5	5	04505	25.0	**$482.70 N**
EZS 100 L	4x16	5	5	04497	20.1	**409.50 N**
EZS 100 R	4x16	5	5	04489	21.7	**409.50 N**

*When ordering please specify Double, Left or Right.

N = Non-stock item; Contact customer service for availability.

Part No. EZS 400*
30″ Closet Fitting with or without 2″ Inlets
(Double, Left Hand or Right Hand; Designed for use in the floor.)

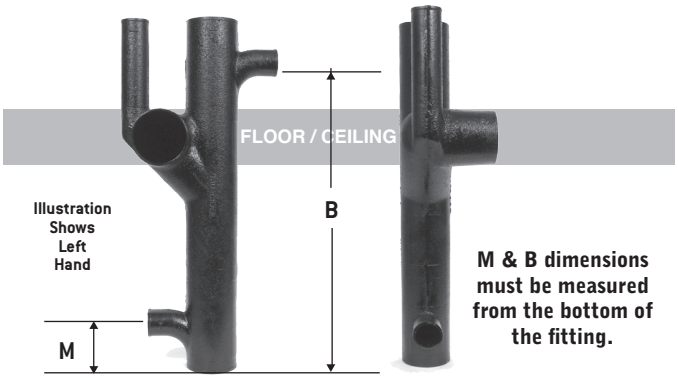

Part No.	Size	M Inlet	B Inlet	*UPC# 611942-	Weight	List Price Each
EZS 400 D	4x30	0	0	04630	33.0	**$857.30 N**
EZS 400 D	4x30	0	6½	04628	33.9	**930.90 N**
EZS 400 D	4x30	0	12	04627	39.6	**930.90 N**
EZS 400 D	4x30	4	0	04622	33.8	**857.30 N**
EZS 400 D	4x30	6½	0	04614	34.3	**857.30 N**
EZS 400 D	4x30	6½	26½	04607	39.0	**930.90 N**
EZS 400 D	4x30	12	0	04606	34.5	**930.90 N**
EZS 400 D	4x30	12	26½	04599	33.4	**930.90 N**
EZS 400 L	4x30	0	0	04598	30.8	**794.10 N**
EZS 400 L	4x30	0	6½	04596	34.2	**794.10 N**
EZS 400 L	4x30	0	12	04595	37.8	**794.10 N**
EZS 400 L	4x30	0	26½	04591	32.2	**794.10 N**
EZS 400 L	4x30	4	0	04590	31.9	**794.10 N**
EZS 400 L	4x30	4	26½	04583	34.0	**881.80 N**
EZS 400 L	4x30	6½	0	04582	32.0	**794.10 N**
EZS 400 L	4x30	6½	6½	04580	36.2	**881.80 N**
EZS 400 L	4x30	6½	26½	04575	36.8	**881.80 N**
EZS 400 L	4x30	12	0	04574	31.5	**794.10 N**
EZS 400 L	4x30	12	26½	04567	35.7	**881.80 N**
EZS 400 R	4x30	0	0	04566	30.6	**794.10 N**
EZS 400 R	4x30	0	6½	04564	34.5	**794.10 N**
EZS 400 R	4x30	0	12	04563	37.1	**794.10 N**
EZS 400 R	4x30	0	26½	04559	31.5	**794.10 N**
EZS 400 R	4x30	4	0	04558	32.0	**794.10 N**
EZS 400 R	4x30	4	26½	04551	28.9	**881.80 N**
EZS 400 R	4x30	6½	0	04550	31.6	**794.10 N**
EZS 400 R	4x30	6½	6½	04548	35.4	**881.80 N**
EZS 400 R	4x30	6½	26½	04543	33.3	**881.80 N**
EZS 400 R	4x30	12	0	04542	32.3	**794.10 N**
EZS 400 R	4x30	12	26½	04536	28.5	**854.00 N**

Part No. EZS 700
Threaded Starter Fitting with or without 2″ No-Hub Inlets
(Double, Left Hand or Right Hand; Designed for use above the floor with back-outlet water closets; Double starter fittings have a baffle.)

Illustration Shows Left Hand

Illustration Shows Double

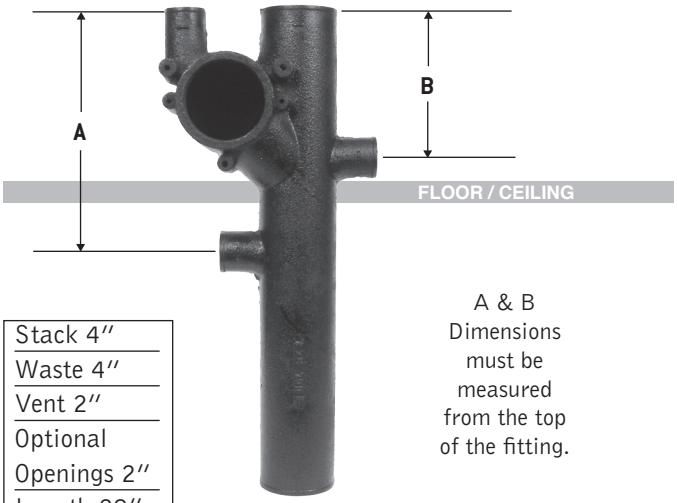

Stack 4″
Waste 4″
Vent 2″
Optional Openings 2″
Length 28″

A & B Dimensions must be measured from the top of the fitting.

Part No.	Size	A Inlet	B Inlet	*UPC# 611942-	Weight	List Price Each
EZS 700 D‡	4x28	0	0	04948	35.5	**$978.20**
EZS 700 D‡	4x28	0	8½	04936	36.4	**978.20**
EZS 700 D‡	4x28	23½	8½	04738	42.0	**1,214.00** N
EZS 700 L	4x28	0	0	04941	30.2	**819.30**
EZS 700 L	4x28	0	8½	04937	31.3	**819.30**
EZS 700 L	4x28	14	8½	04734	36.3	**1,134.60** N
EZS 700 L	4x28	23½	8½	04731	36.2	**846.00** N
EZS 700 R	4x28	0	0	04939	30.3	**819.30**
EZS 700 R	4x28	0	8½	04938	30.8	**819.30**
EZS 700 R	4x28	14	8½	04727	35.3	**1,134.60** N
EZS 700 R	4x28	23½	8½	04730	32.4	**846.00** N

Note: Trim package not included in price of fitting. See trim packages on page 14.

‡ Double starter fitting has a baffle.

N = Non-stock item; Contact customer service for availability.

Part No. EZS 800
Threaded Starter Fitting with or without 2″ No-Hub Inlets
(Double, Left Hand or Right Hand; Designed for use above the floor with back-outlet water closets; Double starter fittings have a baffle.)

Illustration Shows Right Hand

Illustration Shows Double

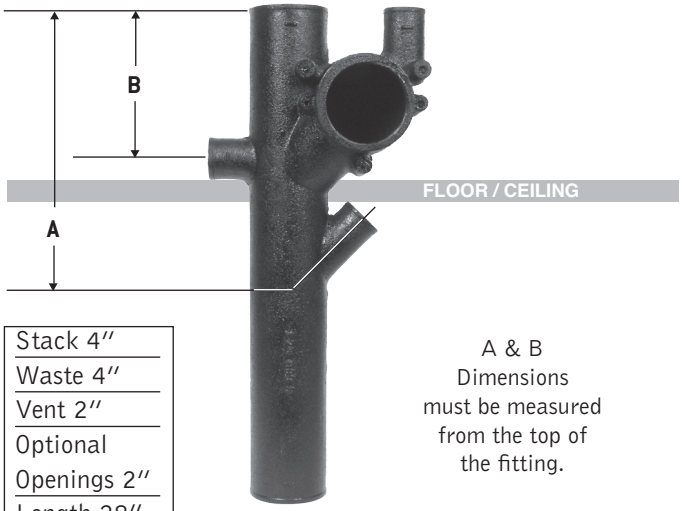

Stack 4″
Waste 4″
Vent 2″
Optional Openings 2″
Length 28″

A & B Dimensions must be measured from the top of the fitting.

Part No.	Size	A Inlet	B Inlet	*UPC# 611942-	Weight	List Price Each
EZS 800 D‡	4x28	16	0	04746	36.2	**$978.20**
EZS 800 D‡	4x28	16	8½	04745	36.5	**1,161.10**
EZS 800 L	4x28	16	0	04772	31.0	**846.00**
EZS 800 L	4x28	16	8½	04742	31.5	**864.70**
EZS 800 R	4x28	16	0	04773	31.1	**846.00**
EZS 800 R	4x28	16	8½	04744	32.3	**864.70**

Note: Trim package not included in price of fitting. See trim packages on page 14.

‡ Double starter fitting has a baffle.

Part No. EZS 710
No-Hub Starter Fitting with or without 2″ No-Hub Inlets
(Double, Left Hand or Right Hand; Designed for use above the floor with back-outlet water closets; Double starter fittings have a baffle.)

Top View

Illustration Shows Left Hand

Top View

Illustration Shows Double

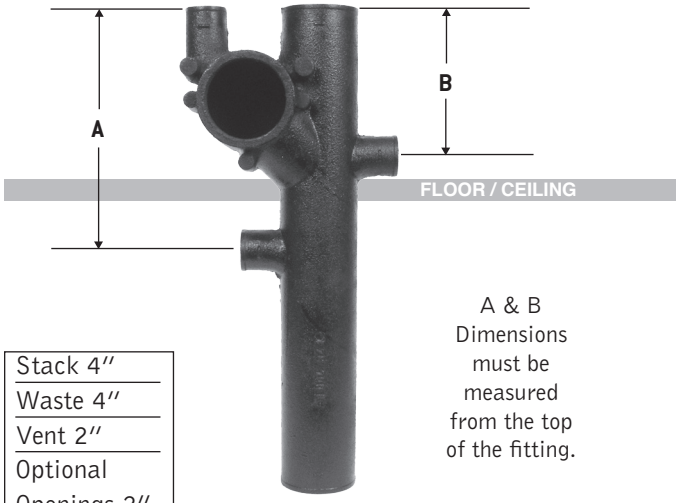

A & B Dimensions must be measured from the top of the fitting.

Stack 4″
Waste 4″
Vent 2″
Optional Openings 2″
Length 28″

		A Inlet	B Inlet			
EZS 710 D‡	4x28	0	0	11032	36.3	**$978.20**
EZS 710 D‡	4x28	0	8½	11033	37.0	**978.20**
EZS 710 D‡	4x28	23½	8½	11034	42.0	**1,214.00** N
EZS 710 L	4x28	0	0	11028	28.6	**819.30**
EZS 710 L	4x28	0	8½	11029	26.8	**819.30**
EZS 710 L	4x28	14	8½	11030	36.3	**955.80** N
EZS 710 L	4x28	23½	8½	11031	37.6	**955.80** N
EZS 710 R	4x28	0	0	11024	31.4	**819.30**
EZS 710 R	4x28	0	8½	11025	34.0	**819.30**
EZS 710 R	4x28	14	8½	11026	35.3	**955.80** N
EZS 710 R	4x28	23½	8½	11027	36.7	**955.80** N

Note: Not designed for use with trim package.

‡ Double starter fitting has a baffle.

N = Non-stock item; Contact customer service for availability.

Part No. EZS 810
No-Hub Starter Fitting with or without 2″ No-Hub Inlets
(Double, Left Hand or Right Hand; Designed for use above the floor with back-outlet water closets; Double starter fittings have a baffle.)

Top View

Illustration Shows Left Hand

Top View

Illustration Shows Double

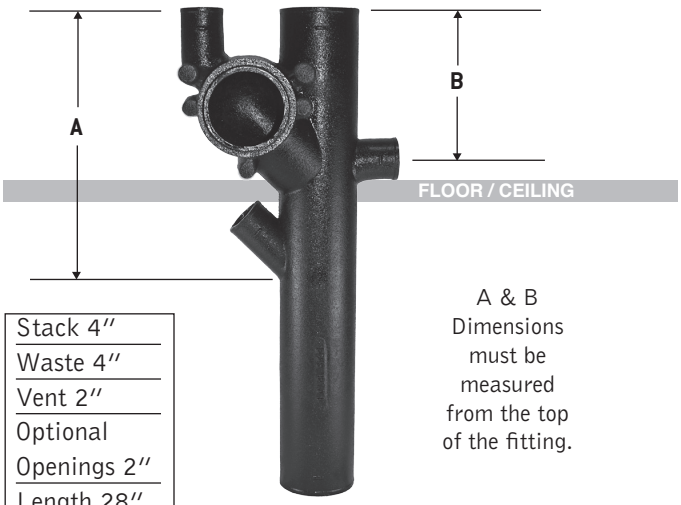

A & B Dimensions must be measured from the top of the fitting.

Stack 4″
Waste 4″
Vent 2″
Optional Openings 2″
Length 28″

		A Inlet	B Inlet			
EZS 810 D‡	4x28	16	0	11022	42.0	**$978.20**
EZS 810 D‡	4x28	16	8½	11023	44.0	**1,161.10**
EZS 810 L	4x28	16	0	11020	31.7	**846.00**
EZS 810 L	4x28	16	8½	11021	32.6	**864.70**
EZS 810 R	4x28	16	0	11018	32.6	**846.00**
EZS 810 R	4x28	16	8½	11019	32.7	**864.70**

Note: Not designed for use with trim package.

‡ Double starter fitting has a baffle.

	*UPC# 611942-	Weight	List Price Each		*UPC# 611942-	Weight	List Price Each

Part No. EZS 22
Trim Package: Support Frame Assembly
(Weight capacity for the EZS 22 Support Frame is 500 pounds maximum.)

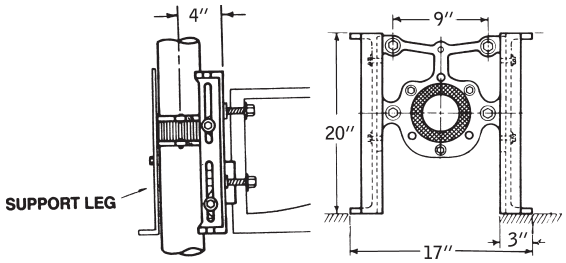

1—FRAME
1—LEFT LEG
1—RIGHT LEG
1—SUPPORT LEG (used for single only)
5—½″ x 1¼″ BOLTS
5—½″ FLAT WASHERS

04757	24.0	**$435.50**

Part No. EZS 23
Trim Package: Floor-Mounted Back-Outlet Assembly
(Note: Not to be used with Part No. EZS 22 Support Frame Assembly)

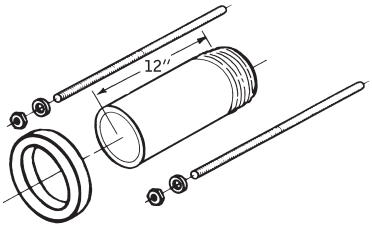

1—4″ PVC Sch. 80 NIPPLE with TEST CAP
1—BOWL GASKET
2—5⁄16″ x 12″ RODS
2—5⁄16″ HEX NUTS
2—5⁄16″ FLAT WASHERS
2—5⁄16″ CAP NUTS

04759	2.8	**$181.30**

Part No. EZS 24
Trim Package: Wall-Hung Back-Outlet Assembly
(To be used with Part No. EZS 22 Support Frame Assembly)

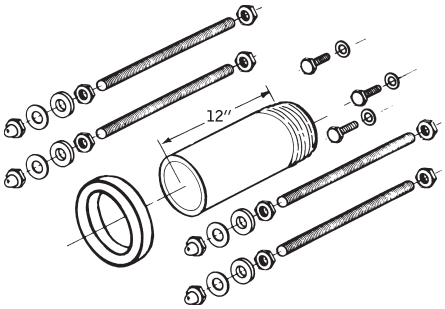

1—4″ PVC Sch. 80 NIPPLE with TEST CAP
1—BOWL GASKET
4—⅝″ x 12″ RODS
4—⅝″ CHROME CAP NUTS
8—⅝″ JAM NUTS
4—⅝″ FLAT WASHERS
4—⅝″ FIBER WASHERS
3—⅜″ x 1½″ BOLTS FOR FACEPLATE
3—⅜″ FLAT WASHERS
4—⅝″ STAR WASHERS

04758	2.8	**$361.80**

Exploded View of Support Assembly Hardware

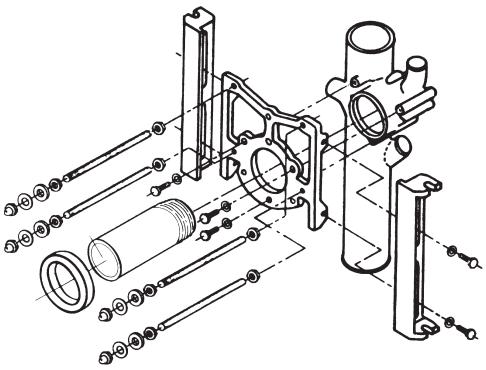

EZS 22 and EZS 24 Assemblies Illustrated

Note: Dimensions and tolerances for No-Hub pipe and fittings are published in Charlotte Pipe's Cast Iron Dimensional Catalog and also Charlotte Pipe's Cast Iron Technical Manual.

TEN FOOT PIPE BUNDLES NO-HUB PIPE

Size	Pieces	Weight	Height
1½ x 10	72	2052	12″
2 x 10	54	1906	11″
3 x 10	36	1944	14″
4 x 10	27	2052	17″
5 x 10	24	2342	20″
6 x 10	18	2120	23″
8 x 10	8	1367	22″
10 x 10	6	1528	26″
12 x 10	6	1908	29″
15 x 10	2	985	19″

Weights are approximate and are for shipping purposes only.
All products manufactured by Charlotte Pipe and Foundry Company are proudly made in the U.S.A.

CHARLOTTE® CAST IRON SOIL PIPE AND FITTINGS

SPECIFICATIONS

This is to certify that products manufactured by Charlotte Pipe and Foundry, Cast Iron Division, are manufactured in the United States and conform to the following standards:

NO-HUB (HUBLESS) PIPE AND FITTINGS

All cast iron soil pipe and fittings shall be marked with the collective trademark of the Cast Iron Soil Pipe Institute (CISPI).
CISPI Standard 301
ASTM A 888
Listed by NSF® International to the UP Code
ISO 9001:2015 Certified

NO-HUB (HUBLESS) COUPLINGS

Cast Iron Soil Pipe Institute Standard No. 310
ASTM C 1277
Certified by NSF® International

NO-HUB (HUBLESS) HEAVY DUTY COUPLINGS

ASTM C 1540
Factory Mutual 1680

Charlotte Pipe products are manufactured to the applicable ASTM standard. Charlotte Pipe and Foundry cannot accept responsibility for the performance, dimensional accuracy, or compatibility of pipe, fittings, gaskets, or couplings not manufactured or sold by Charlotte Pipe and Foundry.

Charlotte Pipe and Charlotte are registered trademarks of Charlotte Pipe and Foundry Company.

TERMS AND CONDITIONS OF SALE

Terms and Conditions of Sale can be found at https://charlottepipe.com/terms_and_conditions.aspx

LIMITED WARRANTY

Charlotte Pipe and Foundry Company® (Charlotte Pipe®) Products are warranted to be free from manufacturing defects and to conform to currently applicable ASTM standards for a period of five (5) years from date of delivery. Buyer's remedy for breach of this warranty is limited to replacement of, or credit for, the defective product. This warranty excludes any expense for removal or reinstallation of any product and any other incidental, consequential, or punitive damages. **This limited warranty is the only warranty made by seller and is expressly in lieu of all other warranties, express and implied, including any warranties of merchantability and fitness for a particular purpose.** No statement, conduct or description by Charlotte Pipe or its representative, in addition to or beyond this Limited Warranty, shall constitute a warranty. This Limited Warranty may only be modified in writing signed by an officer of Charlotte Pipe.

This Limited Warranty will not apply if:

1) The Products are used for purposes other than their intended purpose as defined by local plumbing and building codes, and the applicable ASTM standard.
2) The Products are not installed in good and workmanlike manner consistent with normal industry standards; installed in compliance with the latest instructions published by Charlotte Pipe and good plumbing practices; and installed in conformance with all applicable plumbing, fire and building code requirements.
3) This limited warranty does not apply when the products of Charlotte Pipe are used with the products of other manufacturers that do not meet the applicable ASTM or CISPI standards or that are not marked in a manner to indicate the entity that manufactured them.
4) In hubless cast iron installations, this warranty will not apply if products are joined with unshielded hubless couplings. Charlotte Pipe requires that its hubless cast iron pipe and fittings be joined only with shielded hubless couplings manufactured in accordance with CISPI 310, ASTM C 1277 and certified by NSF® International or with Heavy Duty Couplings meeting ASTM C 1540.
5) The Products fail due to defects or deficiencies in design, engineering, or installation of the piping system of which they are a part.
6) The Products have been the subject of modification; misuse; misapplication; improper maintenance or repair; damage caused by the fault or negligence of anyone other than Charlotte Pipe; or any other act or event beyond the control of Charlotte Pipe.
7) The Products fail due to the freezing of water in the Products.
8) The Products fail due to contact with chemical agents, fire stopping materials, thread sealant, plasticized vinyl products, or other aggressive chemical agents that are not compatible.
9) Pipe outlets, sound attenuation systems or other devices are permanently attached to the surface of Charlotte® PVC, ABS or CPVC products with solvent cement or adhesive glue.

Charlotte Pipe products are manufactured to the applicable ASTM or CISPI standard. Charlotte Pipe and Foundry **cannot** accept responsibility for the performance, dimensional accuracy, or compatibility of pipe, fittings, gaskets, or couplings not manufactured or sold by Charlotte Pipe and Foundry.

This Limited Warranty will not apply unless written notice of a claim is mailed to Charlotte Pipe at the address below within 30 days of discovery of the allegedly defective product.

Any Charlotte Pipe products alleged to be defective **must** be made available to Charlotte Pipe at the following address for verification, inspection and determination of cause:

Charlotte Pipe and Foundry Company
Attention: Technical Services
2109 Randolph Road
Charlotte, North Carolina 28207

Purchaser must obtain a return materials authorization and instructions for return shipment to Charlotte Pipe of any product claimed defective or shipped in error.

Any Charlotte Pipe product **proved** to be defective in manufacture will be replaced F.O.B. point of original delivery, or credit will be issued, at the discretion of Charlotte Pipe.

5/19/23

Charlotte, Charlotte Pipe and "You can't beat the system" are registered trademarks of Charlotte Pipe and Foundry Company.

PO BOX 35430 CHARLOTTE, NORTH CAROLINA 28235
SALES PHONE (704) 348 6450 (800) 572 4199
TECHNICAL PHONE (800) 438 6091 FAX (800) 553 1605
WWW.CHARLOTTEPIPE.COM