ELKAY SPECIFICATIONS

Lustertone® Classic Stainless Steel 30-1/2" x 18-1/2" x 5-3/8" Single Bowl Undermount ADA Sink

Model(s) ELUHAD281655

PRODUCT SPECIFICATIONS

Lustertone® Classic Stainless Steel, 30-1/2" x 18-1/2" x 5-3/8" Single Bowl Undermount ADA Sink. Sink is manufactured from 18 gauge 304 Stainless Steel with a Lustrous Satin finish, Rear Center drain placement, and Bottom only pads.

Installation Type:	Undermount
Material:	304 Stainless Steel
Finish:	Lustrous Satin
Gauge:	18
Sound Deadening:	Bottom only pads
Number of Bowls:	1
Sink Dimensions:	30-1/2" x 18-1/2" x 5-3/8"
Bowl 1 Dimensions:	28" x 16" x 5-3/8"
Drain Size:	3-1/2" (89mm)
Drain Location:	Rear Center
Minimum Cabinet Size:	36"
Mounting Hardware:	Undermount brackets sold separately
Template Included:	Yes
Cutout Template #:	1000001414

Template is available for download at elkay.com. CAD software will be required to open the template.

Installation Profile:

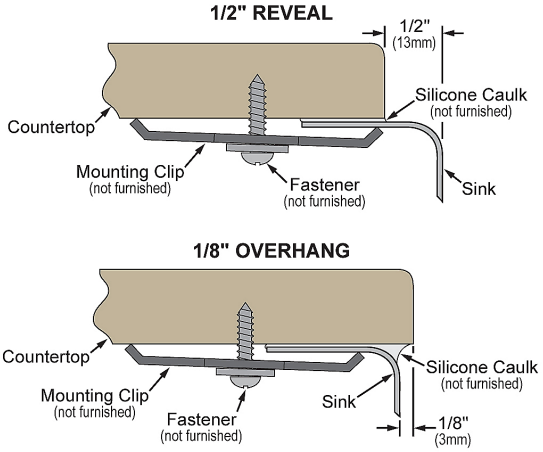

Designed to affix to the underside of any solid surface countertop.

A Century of Tradition and Quality.
For more than 100 years, Elkay has been making innovative products and providing exceptional customer care. We take pride in offering plumbing products that make life easier, inspire change and leave the world a better place.

KBB READERS' CHOICE AWARDS 2025 WINNER

MADE IN USA

Product Compliance: ADA & ICC A117.1
ASME A112.19.3/CSA B45.4

Sinks are listed by IAPMO® as meeting the applicable requirements of the Uniform Plumbing Code®, International Plumbing Code®, and National Plumbing Code of Canada.

Complies with ADA & ICC A117.1 accessibility requirements when installed according to the requirements outlined in these standards.

Clean and Care Manual (PDF)
Installation Instructions (PDF) - 1000005239
Warranty (PDF)

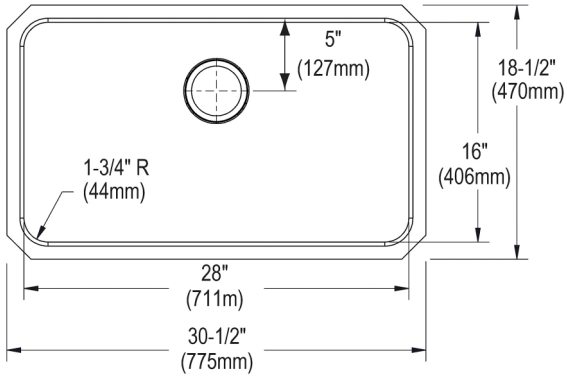

PART:_____QTY: _____

PROJECT:_____

CONTACT:_____

DATE:_____

NOTES:_____

APPROVAL:_____

In keeping with our policy of continuing product improvement, Elkay reserves the right to change product specifications without notice. Please visit elkay.com for the most current version of Elkay product specification sheets. This specification describes an Elkay product with design, quality, and functional benefits to the user. When making a comparison of other producers' offerings, be certain these features are not overlooked. Latest version of the spec sheet available: https://www.elkayfiles.com/spec-sheets/ELUHAD281655_spec.pdf

Optional Accessories		
LKWOBG2816SS	Stainless Steel 26-1/2" x 14-13/16" x 1" Bottom Grid w/Rear Center Drain Opening Spec Sheet (PDF)	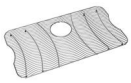
LK99	Deluxe 3-1/2" Drain Type 304 Stainless Steel Body Strainer Basket Rubber Seal and Tailpiece Spec Sheet (PDF)	
LKAD35	3-1/2" Drain Fitting" Stainless Steel Body Strainer Basket and Offset Tailpiece Spec Sheet (PDF)	

In keeping with our policy of continuing product improvement, Elkay reserves the right to change product specifications without notice. Please visit elkay.com for the most current version of Elkay product specification sheets. This specification describes an Elkay product with design, quality, and functional benefits to the user. When making a comparison of other producers' offerings, be certain these features are not overlooked. Latest version of the spec sheet available: https://www.elkayfiles.com/spec-sheets/ELUHAD281655_spec.pdf

© 2026