Submittal Package

Viega MegaPress FKM Fittings

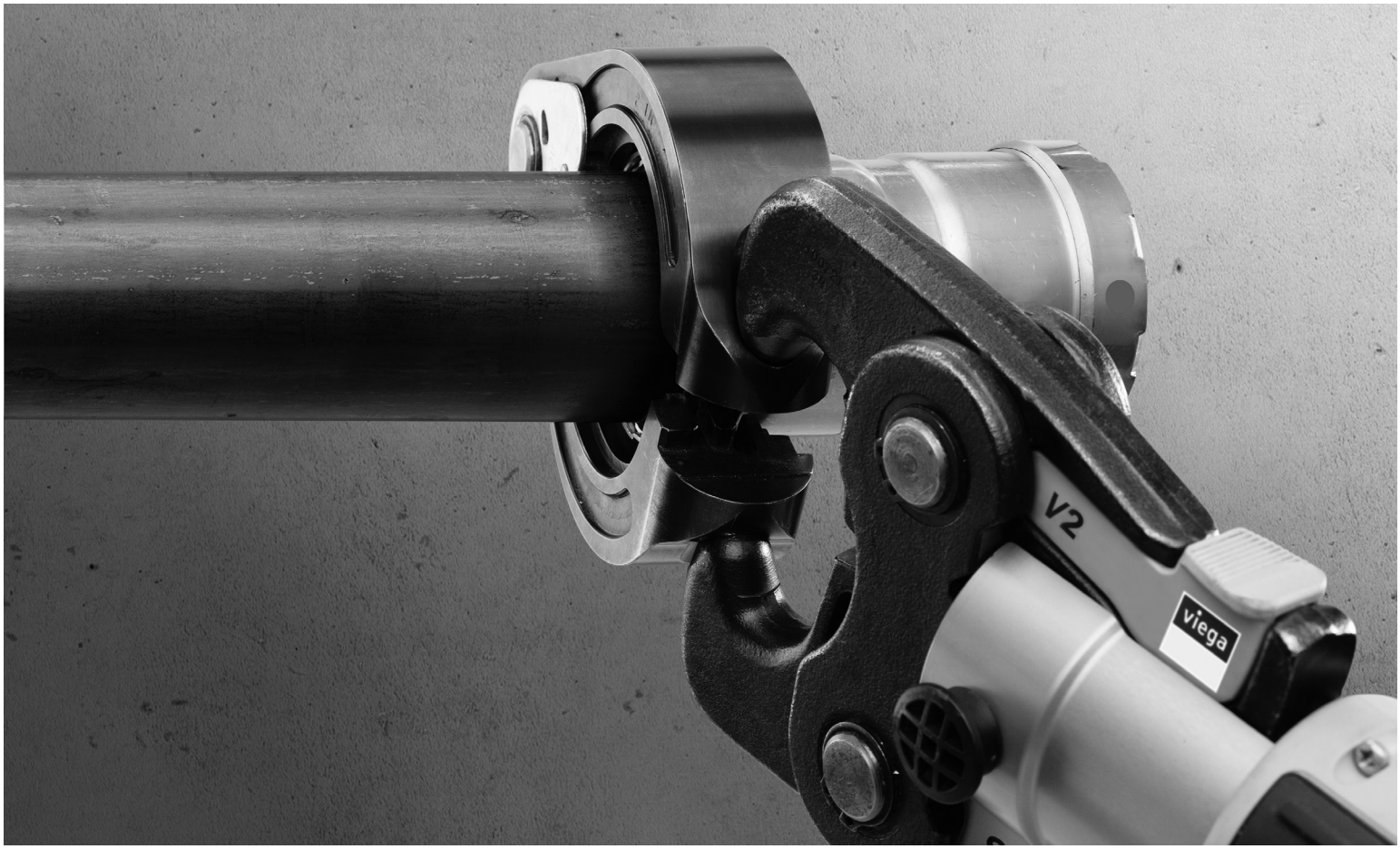

Project _____ **Date** _____

Engineer _____ **Contractor** _____

Submitted by _____

Approved by _____ **Date** _____ **Approved by** _____ **Date** _____

Table of Contents

- ☐ Chilled Water
- ☐ Hydronic Heating
- ☐ Fire Protection
- ☐ Low-Pressure Steam
- ☐ Compressed Air
- ☐ Industrial Gases
- ☐ Vacuum
- ☐ _____
- ☐ _____
- ☐ _____
- ☐ _____
- ☐ _____

1 **System Data Sheet** ____ **3**
MegaPress FKM Fittings ____ 3

2 **Product Instructions** ____ **4**
MegaPress FKM ½" to 4" Fittings ____ 4

3 **Engineering Specifications** ____ **6**
MegaPress FKM Fittings ____ 6

4 **Dimensional Documents** ____ **10**
MegaPress ½" to 4" Fittings ____ 10

5 **Limited Warranty – Viega Metal Systems** ____ **24**

This document is subject to updates. For the most current Viega technical literature, please visit www.viega.us.

Viega products must be installed by trained installers. MegaPress credential training is provided at no cost by Viega and is recommended every two years. Please contact Viega to arrange credential training onsite or at our training facility.
Installation by non-professionals may void Viega LLC's warranty.

1 System Data Sheet

MegaPress FKM Fittings

MegaPress FKM is a carbon steel, cold press system designed for use in chilled water, hydronic heating, and compressed air applications. MegaPress FKM fittings in sizes ½" to 4" are offered in configurations including elbows, couplings, no-stop couplings, reducers, tees, reducing tees, adapters, unions, caps, and flanges.

Components

- Alloy: carbon steel with corrosion-resistant zinc/nickel coating
- FKM sealing element
- 420 stainless steel grip ring
- 304 stainless steel separator ring for ½" to 2" fittings
- PBT separator ring for 2½" to 4" fittings

Operating Parameters

- Operating pressure: 200 psi max.
- Test pressure: 600 psi max.
- Operating temperatures: 14°F to 284°F (with temperature spikes up to 356° F)

Listings and Certifications

- ASTM F3226
- CRN 23019.5 A/B/C
- IAPMO/ANSI/CAN Z1117
- ICC LC1002

Compliant With

- ASME B31, B31.1, B31.3, B31.9
- IAPMO Uniform Mechanical Code (UMC)
- ICC International Mechanical Code (IMC)
- ICC International Residential Code (IRC)
- National Building Code of Canada (NBCC)
- National Plumbing Code of Canada (NPCC)

Approved Applications

- Hydronics
- Low-pressure steam (less than 15 psig)
- Fuel oil
- Industrial gases
- Compressed air
- Vacuum

MegaPress FKM is not approved for potable water application. For more specific information on applications for MegaPress FKM, contact Viega Technical Services at 1-800-976-9819.

MegaPress FKM systems are approved for underground use and must be protected against corrosion in accordance with NFPA 54 section 404.8, NACE Standard RP0169-2002 section 5, 2009 UPC Chapter 6 section 609.3.1, 2009 UMC Chapter 13 section 1312.1.3, and in accordance with local and national codes.

MegaPress FKM fittings are designed for use in piping systems utilizing ASTM A53, A106, A135, and A795 Schedule 5 to Schedule 40 carbon steel pipe.

Recommended Tools

- Standard size press tool (minimum hydraulic ram output of 7200 lbs.)
- #56013 MegaPress jaw/ring kit (½" to 2")
- #26200 MegaPress XL PressBooster with 2½" press ring
- #57078 MegaPress XL 3" and 4" press ring kit
- #57081 Z3 Actuator with 2½" press ring (must be used with press gun with minimum 80 mm press stroke)

Smart Connect® Technology

MegaPress FKM fittings are manufactured with Viega's unique Smart Connect technology. A design of the fitting, Smart Connect technology allows identification of an unpressed fitting during pressure testing.

2 Product Instructions

MegaPress FKM ½" to 4" Fittings

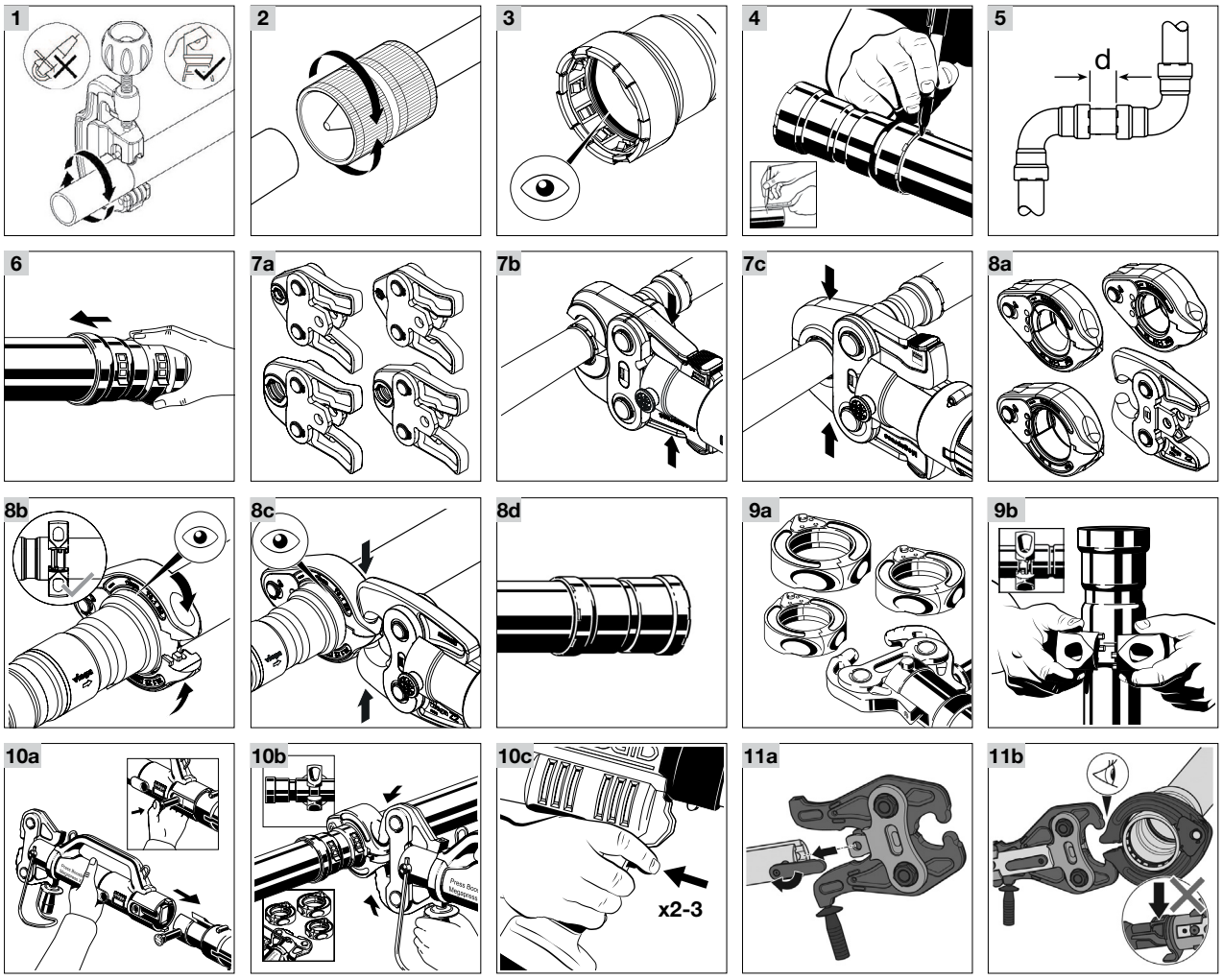

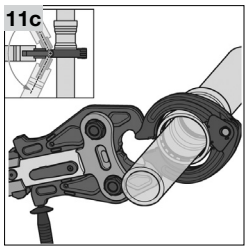

DANGER!
Read and understand all instructions for installing Viega MegaPress fittings. Failure to follow all instructions may result in extensive property damage, serious injury, or death.

Warning!
Keep extremities and foreign objects away from press tool during pressing operation to prevent injury or incomplete press.

1 Cut the pipe square. Do not deform the pipe when cutting.

2 Remove burr from inside and outside of the pipe and prep to proper insertion depth using a preparation tool or fine-grit sandpaper.

3 Fittings contain a sealing element, separator ring, and grip ring. Check that all components are present, clean, and undamaged. Do not use oils or lubricants.

4 Mark proper insertion depth as indicated by the following MegaPress Minimum Insertion Depth chart. Improper insertion depth may result in an improper seal. It is recommended that the depth marking be visible on the completed assembly.

MegaPress Minimum Insertion Depth (d)

Pipe size (in)	d (in)	d (mm)
½	1 1/16	27
¾	1 3/16	30
1	1⅜	35
1¼	1 13/16	46
1½	1⅞	48
2	2	51
2½	1 13/16	46
3	2 5/16	59
4	3⅛	80

5 Refer to the following chart for the minimum distance between fittings to ensure a correct press. Failure to provide this distance may result in an improper seal.

MegaPress Minimum Distance (d)		
Pipe size (in)	d (in)	d (mm)
½	¼	6
¾	¼	6
1	¼	6
1¼	½	13
1½	½	13
2	½	13
2½	½	13
3	½	13
4	½	13

6 While turning slightly, slide fitting onto the pipe to the marked depth. End of pipe must contact stop. It is recommended that the depth marking still be visible on the completed assembly.

Pressing ½" to 1" Fittings

7a Viega MegaPress ½" to 1" fitting connections must be performed with MegaPress jaws and rings.

7b Open the MegaPress jaw and place at right angles on the fitting. Visually check insertion depth using mark on pipe.

7c Start pressing process and hold the trigger until the jaw has engaged the fitting. Jaws will automatically release after a full press is made. Remove the MegaPress jaw from the fitting.

Pressing 1¼" to 2" Fittings

8a Viega MegaPress 1¼" to 2" fitting connections must be performed with MegaPress rings and a V2 actuator.

8b Open the MegaPress ring and place at right angles on the fitting. The MegaPress ring must be engaged on the fitting bead. Check insertion depth.

8c Place V2 actuator onto the MegaPress ring and start the pressing process. Hold the trigger until the actuator has engaged the MegaPress ring.

8d Once the press is complete, release the V2 actuator from the MegaPress ring. Remove the MegaPress ring from the fitting.

Pressing 2½" to 4" Fittings

9a Viega MegaPress 2½" to 4" fitting connections must be made using MegaPress XL rings and either the MegaPress XL PressBooster or the MegaPress Z3 actuator.

9b Open MegaPress XL ring and place at right angles on the fitting. The MegaPress XL ring must be engaged on the fitting bead. Check insertion depth.

Pressing with MegaPress XL PressBooster

10a Remove the retaining bolt of the press machine. Slide the PressBooster in via the press jaw fixture. Slide the retaining bolt of the press machine in as far as it will go.

10b To open the PressBooster jaw, pull back the handle at the hinged adapter jaw. Place PressBooster onto the MegaPress XL ring by inserting the ball heads of the hinged adapter jaw into the contact points of the XL ring. Push the handle forward to close the hinged adapter jaw.

10c Hold the trigger until the PressBooster has engaged the MegaPress XL ring. The PressBooster requires two presses of the trigger to execute a complete press. A third press may be needed to initiate a release cycle to reset the rollers back to the original position. Once the press is complete, release the PressBooster from the MegaPress XL ring. Remove the MegaPress XL ring from the fitting.

Pressing with MegaPress Z3 Actuator

11a On the press tool, rotate the retaining pin handle 180 degrees and pull it out to open the slot for the actuator. Insert the Viega Z3 actuator into the slot on the press tool. On the press tool, push the retaining pin back in and rotate it 180 degrees.

11b Open the Viega Z3 actuator by pulling the handle back. Place the open Viega Z3 actuator onto the MegaPress XL ring by inserting the ball heads of the actuator into the contact points of the XL ring. Close the Z3 actuator.

11c Start the pressing process by holding the press tool trigger until the actuator has engaged the XL ring. When the press cycle is complete, the actuator will stop and release. Once the Z3 actuator releases, remove it from the MegaPress XL ring and then remove the MegaPress XL ring from the fitting.

3 Engineering Specifications

MegaPress FKM Fittings

Part 1: General

1.1 Summary

MegaPress FKM is a cold press mechanical joint fitting system utilizing standard Schedule 5 to Schedule 40 carbon steel pipe in sizes ½" to 4".

1.2 Definitions

ASME: American Society of Mechanical Engineers
ASTM: American Society for Testing and Materials
AWWA: American Water Works Association
CRN: Canadian Registration Number
CSA: Canadian Standards Association
FKM: Fluoroelastomer
FM: Factory Mutual
IACS: International Association of Classification Societies
IAPMO: International Association of Plumbing & Mechanical Officials
ICC: International Code Council
MSS: Manufacturers Standardization Society
NACE International: National Association of Corrosion Engineers
NFPA: National Fire Protection Association
UL: Underwriters Laboratory

1.3 References

ASME A13.1 Scheme for the Identification of Piping Systems
ASME B1.20.1 Pipe Threads, General Purpose (inch)
ASME B16.3 Malleable Iron Threaded Fittings
ASME B16.9 Factory Made Wrought Steel Butt Welding Fittings
ASME B31.1 Power Piping
ASME B31.3 Process Piping
ASME B31.9 Building Piping Systems
ASME B36.10 Welded and Seamless Wrought Steel Pipe
ASTM A53 Specification for Pipe, Steel, Black and Hot-Dipped, Zinc-Coated, Welded and Seamless Pipe
ASTM A106 Specification for Seamless Carbon Steel Pipe - High Temperature Service
ASTM A135 Specification for Electric-Resistance-Welded Steel Pipe
ASTM A420 Piping Fittings of Wrought Carbon Steel and Alloy Steel for Low Temperature Service
ASTM A795 Specification for Black and Hot-Dipped Zinc-Coated (Galvanized) Welded and Seamless Steel Pipe for Fire Protection Use
ASTM D2000 Classification System for Rubber Products in Automotive Applications
ASTM F1476 Performance of Gasketed Mechanical Couplings for Use in Piping Applications
ASTM F3226 Standard specification for metallic press-connect fittings for piping and tubing systems
AWWAC651 Standard for Disinfecting Water Mains
IACS Requirements concerning Pipes And Pressure Vessels
IAPMO Uniform Mechanical Code
IAPMO Uniform Plumbing Code
ICC International Mechanical Code
ICC International Plumbing Code
MSS SP 58 Pipe Hangers and Supports Materials, Design and Manufacturer
NACE RP 0169 Control of External Corrosion on Underground or Submerged Metallic Piping Systems

1.4 Quality Assurance

A. Installer shall be qualified, licensed within the jurisdiction, and familiar with the installation of cold press mechanical joint systems.
B. MegaPress press fittings shall be installed using the proper tool, actuator, jaws and rings as instructed by the press fitting manufacturer.
C. The installation of carbon steel pipe in hydronic systems shall conform to the requirements of the ICC International Mechanical Code or the IAPMO Uniform Mechanical Code.
D. Compliance to ASME B31.9 for building services piping.

1.5 Delivery, Storage and Handling

A. Carbon steel pipe shall be shipped to the job site in such a manner to protect the pipe. The pipe and fittings shall not be roughly handled during shipment. Pipe and fittings shall be unloaded with reasonable care.
B. Protect the stored product from moisture and dirt. Elevate above grade. When stored inside, do not exceed the structural capacity of the floor.
C. Protect fittings and piping specialties from moisture and dirt.

1.6 Project Conditions

Verify length of pipe required by field measurements.

1.7 Warranty

A. Viega LLC (Viega) warrants to end users, installers and distribution houses that its Viega metal press products (MegaPress) when properly installed shall be free from failure caused by manufacturing defects. Refer to Viega warranties for specific information.
B. Viega LLC (Viega) manufacturer of the fittings shall not be responsible for the improper use, handling or installation of the product.

Part 2: Products

2.1 Manufacturer

Viega LLC
585 Interlocken Blvd.
Broomfield CO, 80021
Phone: (800) 976-9819
www.viega.us

2.2 Material

A. Pipe: Carbon steel pipe shall conform to ASTM A53, A106, A135 or A795. Pipe schedule (pipe wall thickness) shall conform to the standard referenced dimensions for Schedule 5 to 40.
B. Fittings: Cold Press Mechanical Joint Fitting shall conform to material requirements of ASTM A420 or ASME B16.3 and performance criteria of IAPMO/ANSI/CAN Z1117 and ASTM F3226. Sealing elements for press fittings shall be FKM. Sealing elements shall be factory installed or an alternative supplied by fitting manufacturer. Press ends shall have Smart Connect® technology design. MegaPress fittings with the Smart Connect technology assure leakage of liquids and/or gases from inside the system past the sealing element of an unpressed connection. The function of this technology is to provide the installer quick and easy identification of connections which have not been pressed prior to putting the system into operation.
C. Pipe Thread: Pipe Threads shall conform to ASTM B16.3.
D. Hangers and supports: Hangers and supports shall conform to MSS SP 58.
E. Hanger spacing: In accordance with ASME B 31.1, NFPA54, UPC, IMC other National or local codes.

2.3 Source Quality Control

A. Fittings shall be listed and approved for their intended application.

Part 3: Execution

3.1 Examination

A. The installing contractor shall examine the pipe and fittings for defects, sand holes or cracks. There shall be no defects of the pipe or fittings. Any damaged pipe or fittings shall be rejected.
B. The installing contractor shall insure that internal components of the cold press mechanical joint press fitting are properly in place and free from damage. This is to include sealing elements, grip ring & separator rings.

3.2 Preparation

A. Carbon steel pipe shall be cut with an approved pipe cutting tool. The pipe shall be cut square to permit proper joining with the fittings.
B. Remove scale, slag, dirt and debris from inside and outside of pipe and fittings before assembly. The protective coating shall be removed from the outside of the pipe end and shall be wiped clean and dry. The burrs on the pipe shall be reamed with a deburring or reaming tool.

3.3 Installation General Locations

Plans indicate general location and arrangement of piping systems. Identified locations and arrangements are used to size pipe and calculate friction loss, expansion, pump sizing and other design considerations. Install piping as indicated, except where deviations to layout are approved on coordination drawings.

3.4 Installation

A. Pressure ratings: Components shall have a pressure rating equal to or greater than the system operating pressure.
B. Install piping free of sags, bends and kinks.
C. Change of Direction: Fittings shall be used for changes in direction and branch connections.
D. Threaded Joints: Threaded joints shall have pipe joint compound or teflon tape applied to the male threads only. Tighten joint with a wrench and backup wrench as required.
E. Press Fittings: MegaPress FKM cold press mechanical joint fittings shall be installed in accordance with the manufacturer's installation instructions. The protective corrosion coating shall be removed from the outside of the pipe end. The pipe shall be fully inserted into the fitting and the pipe marked at the shoulder of the fitting. The fitting alignment shall be checked against the mark on the pipe to assure the pipe is fully engaged (inserted) in the fitting. The joints shall be pressed using the tool(s) approved by the manufacturer.
F. Pipe Protection: Pipe shall be protected against abrasion where pipe is in contact with other building members by an approved tape, pipe insulation or otherwise suitable method of isolation.
G. Penetration Protection: Provide allowance for thermal expansion and contraction of pipe passing through a wall, floor, ceiling or partition by wrapping with an approved tape or pipe insulation or by installing through an appropriately sized sleeve. Penetrations for fire resistant rated assemblies shall maintain the rating of the assembly.
H. Backfill Material: Backfill material shall not include any ashes, cinders, refuse, stones, boulders or other materials which can damage or break the piping or promote corrosive action in any trench or excavation in which piping is installed.
I. Horizontal Support: Install hangers for horizontal piping in accordance with MSS SP 58.
J. Vertical Support: Pipe shall be supported at each floor level and at intervals not exceeding 10 ft or in accordance with local codes.
K. Galvanic Corrosion: Hangers and supports shall be applicable to prevent galvanic corrosion between the system and the supporting members.
L. Seismic Restraint: In areas where seismic conditions exist, the system shall be installed per the applicable seismic recommendations.
M. Pipe Identification: Systems shall be identified in accordance with the requirements of ASME A13.1.

3.5 Field Quality Control

A. All piping systems shall be tested per applicable local codes for joint tightness & leak detection prior to being placed in service.

B. Water Testing: The piping system shall be water tested for joint tightness. The piping system shall be filled with water. The system shall be pressurized to the maximum pressure and length of time required by the code or standard. The system shall have no leaks at the rated pressure.

C. Air Testing: The piping system shall be air tested for joint tightness. The piping system shall be pressurized with air to the maximum pressure of the system or to the code or standard required minimum for the required length of time. The system shall have no leaks at the rated pressure.

4 Dimensional Documents

MegaPress ½" to 4" Fittings

MegaPress 90° Elbow, Carbon Steel, P x P – Models 4816 / 5916 / 6616

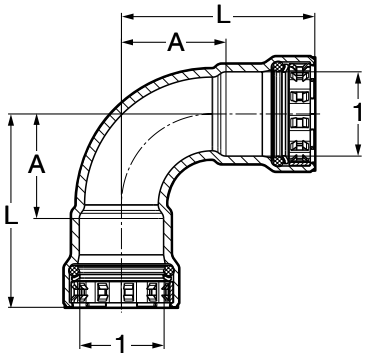

Part No.			Size (in)	A (in)		L (in)	
EPDM	FKM	HNBR	1	Dec	Frac	Dec	Frac
25200	84305	25201	½	1.17	1 3/16	2.24	2¼
25205	84310	25206	¾	1.36	1⅜	2.52	2½
25210	84315	25211	1	1.72	1¾	3.07	3 1/16
25215	84320	25216	1¼	2.00	2	3.82	3 13/16
25220	84325	25221	1½	2.26	2¼	4.13	4⅛
25225	84330	25226	2	2.80	2 13/16	4.78	4¾

Viega MegaPress 90° Elbow P x P – Models 4816XL / 6616XL

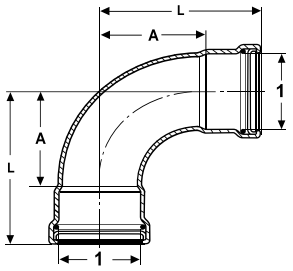

Part No.		Size (in)	A (in)		L (in)	
FKM	HNBR	1	Dec	Frac	Dec	Frac
26500	28600	2½	4.15	4⅛	5.94	5 15/16
26505	28605	3	4.76	4¾	7.09	7 1/16
26510	28610	4	6.00	6	9.17	9 3/16

MegaPress 90° Elbow, Carbon Steel, P x FTG – Models 4816.1 / 5916.1 / 6616.1

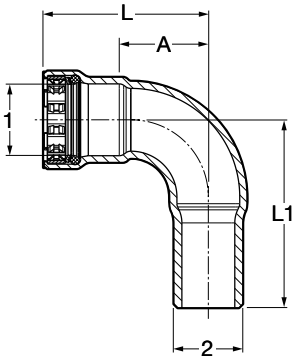

Part No.			Size (in)	A (in)		L (in)		L1 (in)	
EPDM	FKM	HNBR	1 2	Dec	Frac	Dec	Frac	Dec	Frac
26050	84875	26051	½ x ½	1.17	1 3/16	2.24	2¼	2.56	2 9/16
26055	84880	26056	¾ x ¾	1.36	1⅜	2.52	2½	2.87	2⅞
26060	84885	26061	1 x 1	1.72	1¾	3.07	3 1/16	3.39	3⅜
26065	84890	26066	1¼ x 1¼	2.00	2	3.82	3 13/16	4.04	4 1/16
26070	84895	26071	1½ x 1½	2.26	2¼	4.13	4⅛	4.21	4 3/16
26075	84900	26076	2 x 2	2.80	2 3/16	4.78	4¾	5.08	5 1/16

Viega MegaPress 90° Street Elbow P x FTG – Models 4816.1XL / 6616.1XL

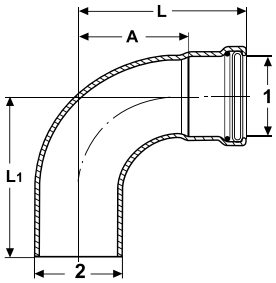

Part No.		Size (in)	A (in)		L (in)		L1 (in)	
FKM	HNBR	1 2	Dec	Frac	Dec	Frac	Dec	Frac
26515	28615	2½ x 2½	4.15	4⅛	5.94	5 15/16	6.06	6 1/16
26520	28620	3 x 3	4.76	4¾	7.09	7 1/16	6.81	6 13/16
26525	28625	4 x 4	6.00	6	9.17	9 3/16	8.78	8¾

MegaPress 45° Elbow, Carbon Steel, P x P – Models 4826 / 5926 / 6626

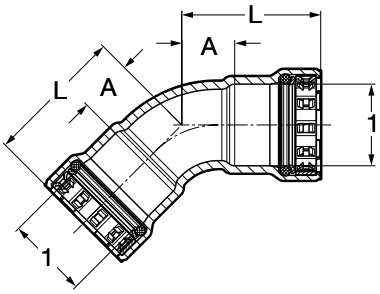

Part No.			Size (in)	A (in)		L (in)	
EPDM	FKM	HNBR	1	Dec	Frac	Dec	Frac
25230	84335	25231	½	0.60	⅝	1.67	1 11/16
25235	84340	25236	¾	0.71	11/16	1.87	1⅞
25240	84345	25241	1	0.86	⅞	2.20	2 3/16
25245	84350	25246	1¼	0.98	1	2.80	2 13/16
25250	84355	25251	1½	1.12	1⅛	2.99	3
25255	84360	25256	2	1.32	1 5/16	3.31	3 5/16

Viega MegaPress 45° Elbow P x P – Models 4826XL / 6626XL

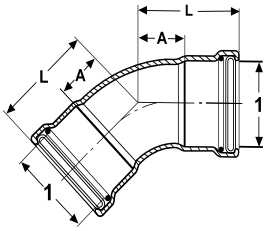

Part No.		Size (in)	A (in)		L (in)	
FKM	HNBR	1	Dec	Frac	Dec	Frac
26530	28630	2½	2.10	2⅛	3.90	3⅞
26535	28635	3	2.26	2¼	4.56	4 9/16
26540	28640	4	2.74	2¾	5.92	5 15/16

MegaPress 45° Elbow, Carbon Steel, P x FTG – Models 4826.1 / 5926.1 / 6626.1

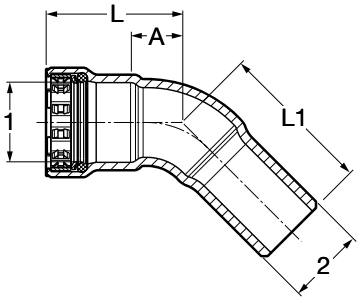

Part No.			Size (in)	A (in)		L (in)		L1 (in)	
EPDM	FKM	HNBR	1 2	Dec	Frac	Dec	Frac	Dec	Frac
26100	84905	26101	½ x ½	0.60	⅝	1.67	1 11/16	1.97	1 15/16
26105	84910	26106	¾ x ¾	0.71	11/16	1.87	1⅞	2.13	2⅛
26110	84915	26111	1 x 1	0.86	⅞	2.20	2 3/16	2.52	2½
26115	84920	26116	1¼ x 1¼	0.98	1	2.80	2 13/16	2.99	3
26120	84925	26121	1½ x 1½	1.12	1⅛	2.99	3	3.07	3 1/16
26125	84930	26126	2 x 2	1.32	1 5/16	3.31	3 5/16	3.58	3 9/16

Viega MegaPress 45° Street Elbow P x FTG – Models 4826.1XL /6626.1XL

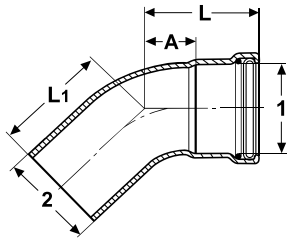

Part No.		Size (in)		A (in)		L (in)		L1 (in)	
FKM	HNBR	1	2	Dec	Frac	Dec	Frac	Dec	Frac
26545	28645	2½	2½	2.10	2⅛	3.90	3⅞	3.95	3 15/16
26550	28650	3	3	2.26	2¼	4.56	4 9/16	4.34	4 5/16
26555	28655	4	4	2.74	2¾	5.92	4 15/16	5.62	5⅝

MegaPress Tee, Carbon Steel, P x P x P – Models 4818 / 5918 / 6618

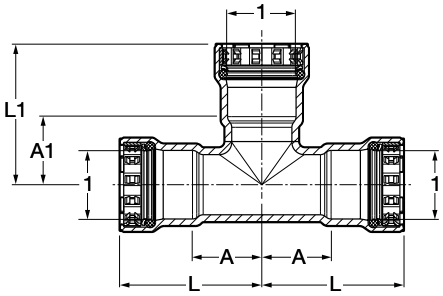

Part No.			Size (in)	A (in)		A1 (in)		L (in)		L1 (in)	
EPDM	FKM	HNBR	1	Dec	Frac	Dec	Frac	Dec	Frac	Dec	Frac
25300	84365	25301	½	0.97	1	0.93	15/16	2.04	2 1/16	2.00	2
25305	84370	25306	¾	1.11	1⅛	1.09	1/16	2.26	2¼	2.24	2¼
25310	84375	25311	1	1.23	1¼	1.23	1¼	2.57	2 9/16	2.57	2 9/16
25315	84395	25316	1¼	1.41	1 7/16	1.38	1⅜	3.23	3¼	3.20	3 3/16
25320	84400	25321	1½	1.57	1 9/16	1.54	1 9/16	3.44	3 7/16	3.41	3 7/16
25325	84405	25326	2	1.81	1 13/16	1.80	1 13/16	3.80	3 13/16	3.79	3 13/16

Viega MegaPress Tee P x P x P – Models 4818XL / 6618XL

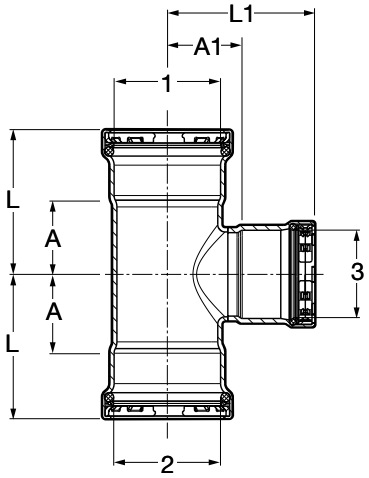

Part No.		Size (in)			A (in)		A1 (in)		L (in)		L1 (in)	
FKM	HNBR	1	2	3	Dec	Frac	Dec	Frac	Dec	Frac	Dec	Frac
NA	28910	2½	2½	1	1.35	1⅜	2.04	2 1/16	3.15	3⅛	3.38	3⅜
NA	28905	2½	2½	1¼	1.72	1¾	2.06	2 1/16	3.52	3½	3.87	3⅞
26575	28675	2½	2½	1½	1.72	1¾	2.08	2 1/16	3.52	3½	3.95	3 15/16
26580	28680	2½	2½	2	2.16	2 3/16	2.05	2 1/16	3.96	3 15/16	4.04	4 1/16
26560	28660	2½	2½	2½	2.16	2 3/16	2.26	2¼	3.96	3 15/16	4.06	4 1/16
26595	28695	3	3	1¼	1.70	1 11/16	2.31	2 5/16	4.04	4 1/16	4.13	4⅛
26590	28690	3	3	1½	1.80	1 13/16	2.33	2 5/16	4.13	4⅛	4.20	4 3/16
26585	28685	3	3	2	2.11	2⅛	2.30	2 5/16	4.41	4 7/16	4.29	4 5/16
26600	28700	3	3	2½	2.32	2½	2.51	2½	4.63	4⅝	4.31	4 5/16
26565	28665	3	3	3	2.55	2 9/16	2.52	2½	4.88	4⅞	4.82	4 13/16
26605	28705	4	4	1½	1.86	1⅞	2.90	2⅞	5.04	5 1/16	4.77	4¾
26610	28710	4	4	2	2.18	2 3/16	2.87	2⅞	5.35	5⅜	4.86	4⅞
26615	28715	4	4	2½	2.40	2⅜	3.08	3 1/16	5.55	5 9/16	4.88	4⅞
26620	28720	4	4	3	2.66	2 11/16	3.13	3⅛	5.81	5 13/16	5.43	5 7/16
26570	28670	4	4	4	3.22	3¼	3.08	3 1/16	6.40	6⅜	6.26	6¼

MegaPress Reducing Tee, Carbon Steel, P x P x P – Models 4818 / 5918 / 6618

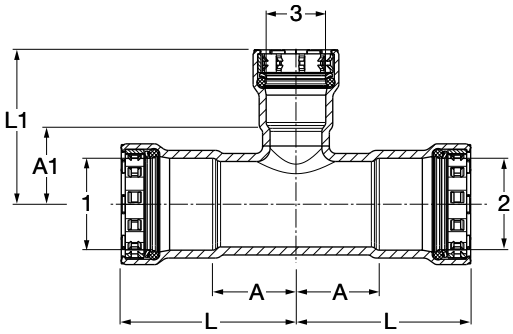

Part No.			Size (in)	A (in)		A1 (in)		L (in)		L1 (in)	
EPDM	FKM	HNBR	1 2 3	Dec	Frac	Dec	Frac	Dec	Frac	Dec	Frac
25330	84410	25331	¾ x ¾ x ½	1.11	1⅛	1.07	1 1/16	2.26	2¼	2.14	2⅛
25335	84415	25336	1 x 1 x ½	1.23	1¼	1.20	1 3/16	2.57	2 9/16	2.28	2¼
25340	84420	25341	1 x 1 x ¾	1.23	1¼	1.24	1¼	2.57	2 9/16	2.40	2⅜
25510	84380	25491	1¼ x 1¼ x ½	1.41	1 7/16	1.35	1⅜	3.23	3¼	2.42	2 7/16
25515	84385	25496	1¼ x 1¼ x ¾	1.41	1 7/16	1.39	1⅜	3.23	3¼	2.55	2 9/16
25350	84390	25351	1¼ x 1¼ x 1	1.41	1 7/16	1.38	1⅜	3.23	3¼	2.73	2¾
25360	84425	25361	1½ x 1½ x ½	1.57	1 9/16	1.44	1 7/16	3.44	3 7/16	2.51	2½
25365	84430	25366	1½ x 1½ x ¾	1.57	1 9/16	1.48	1½	3.44	3 7/16	2.64	2⅝
25370	84435	25371	1½ x 1½ x 1	1.57	1 9/16	1.48	1½	3.44	3 7/16	2.83	2 13/16
25375	84440	25376	1½ x 1½ x 1¼	1.57	1 9/16	1.50	1½	3.44	3 7/16	3.32	3 5/16
25380	84445	25381	2 x 2 x ½	1.81	1 13/16	1.74	1¾	3.80	3 13/16	2.81	2 13/16
25385	84450	25386	2 x 2 x ¾	1.81	1 13/16	1.80	1 13/16	3.80	3 13/16	2.95	2 15/16
25390	84455	25391	2 x 2 x 1	1.81	1 13/16	1.75	1¾	3.80	3 13/16	3.10	3⅛
25395	84460	25396	2 x 2 x 1¼	1.81	1 13/16	1.78	1¾	3.80	3 13/16	3.60	3⅝
25400	84465	25401	2 x 2 x 1½	1.81	1 13/16	1.84	1 13/16	3.80	3 13/16	3.71	3 11/16

MegaPress Reducing Tee, Carbon Steel, P x P x FPT – Models 4817.2 / 5917.2 / 6617.2

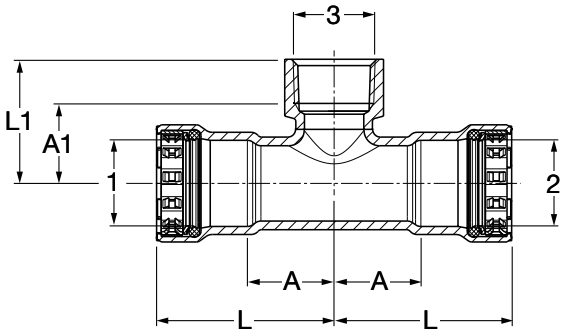

Part No.			Size (in)	A (in)		A1 (in)		L (in)		L1 (in)	
EPDM	FKM	HNBR	1 2 3	Dec	Frac	Dec	Frac	Dec	Frac	Dec	Frac
25405	84545	25406	¾ x ¾ x ½	1.11	1⅛	1.02	1	2.26	2¼	1.55	1 9/16
25480	84550	25481	¾ x ¾ x ¾	1.11	1⅛	1.03	1	2.26	2¼	1.58	1 9/16
25410	84555	25411	1 x 1 x ½	1.23	1¼	1.19	1 3/16	2.57	2 9/16	1.73	1¾
25415	84560	25416	1 x 1 x ¾	1.23	1¼	1.18	1 3/16	2.57	2 9/16	1.73	1¾
25485	84575	25486	1¼ x 1¼ x ½	1.41	1 7/16	1.31	1 5/16	3.23	3¼	1.85	1⅞
25505	84570	25506	1¼ x 1¼ x ¾	1.41	1 7/16	1.33	1 5/16	3.23	3¼	1.89	1⅞
25500	84565	25501	1¼ x 1¼ x 1	1.41	1 7/16	1.37	1⅜	3.23	3¼	2.03	2
25435	84580	25436	1½ x 1½ x ½	1.57	1 9/16	1.42	1 7/16	3.44	3 7/16	1.95	1 15/16
25440	84585	25441	1½ x 1½ x ¾	1.57	1 9/16	1.41	1 7/16	3.44	3 7/16	1.97	2
25445	84590	25446	1½ x 1½ x 1	1.57	1 9/16	1.57	1 9/16	3.44	3 7/16	2.24	2¼
25450	NA	25451	1½ x 1½ x 1¼	1.57	1 9/16	1.47	1½	3.44	3 7/16	2.15	2⅛
25455	84595	25456	2 x 2 x ½	1.81	1 13/16	1.70	1 11/16	3.80	3 13/16	2.24	2¼
25460	84600	25461	2 x 2 x ¾	1.81	1 13/16	1.72	1¾	3.80	3 13/16	2.28	2¼
25465	84605	25466	2 x 2 x 1	1.81	1 13/16	1.89	1⅞	3.80	3 13/16	2.55	2 9/16
25470	NA	25471	2 x 2 x 1¼	1.81	1 13/16	1.77	1¾	3.80	3 13/16	2.45	2 7/16
25475	NA	25476	2 x 2 x 1½	1.81	1 13/16	1.73	1¾	3.80	3 13/16	2.41	2 7/16

Viega MegaPress Tee P x P x FPT – Models 4817.2XL / 6617.2XL

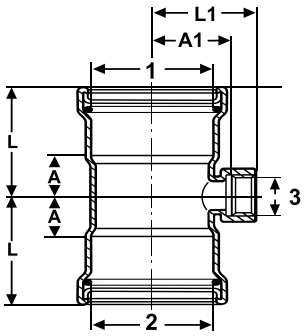

Part No.		Size (in)	A (in)		A1 (in)		L (in)		L1 (in)	
FKM	HNBR	1 2 3	Dec	Frac	Dec	Frac	Dec	Frac	Dec	Frac
26625	28725	2½ x 2½ x ¾	1.35	1⅜	2.00	2	3.15	3⅛	2.55	2 9/16
26630	28730	3 x 3 x ¾	1.44	1 7/16	2.24	2¼	3.74	3¾	2.80	2 13/16
26635	28735	4 x 4 x ¾	1.55	1 9/16	2.76	2¾	4.72	4¾	3.31	3 5/16

MegaPress Adapter, Carbon Steel, P x MPT – Models 4811 / 5911 / 6611

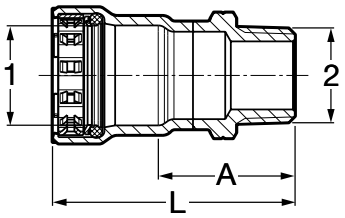

Part No.			Size (in)	A (in)		L (in)	
EPDM	FKM	HNBR	1 2	Dec	Frac	Dec	Frac
25100	84245	25101	½ x ½	1.45	1 7/16	2.52	2½
25105	84250	25106	¾ x ¾	1.50	1½	2.66	2 11/16
25110	84255	25111	1 x 1	1.66	1 11/16	3.00	3
25115	84260	25116	1¼ x 1¼	1.90	1⅞	3.70	3 11/16
25120	84265	25121	1½ x 1½	1.93	1 15/16	3.80	3 13/16
25125	84270	25126	2 x 2	1.93	1 15/16	3.92	3 15/16

Viega MegaPress Adapter P x MPT – Models 4811XL / 6611XL

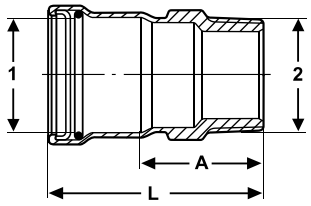

Part No.		Size (in)	A (in)		L (in)	
FKM	HNBR	1 2	Dec	Frac	Dec	Frac
26640	28740	2½ x 2½	2.75	2¾	4.55	4 9/16
26645	28745	3 x 3	2.89	2⅞	5.20	5 3/16
26650	28750	4 x 4	3.03	3	6.21	6 3/16

MegaPress Adapter, Carbon Steel, P x FPT – Models 4812 / 5912 / 6612

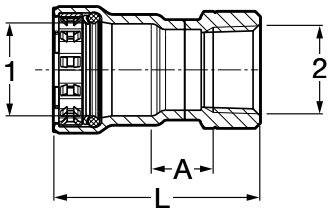

Part No.			Size (in)	A (in)		L (in)	
EPDM	FKM	HNBR	1 2	Dec	Frac	Dec	Frac
25130	84275	25131	½ x ½	0.69	11/16	2.29	2 5/16
25135	84280	25136	¾ x ¾	0.74	¾	2.45	2 7/16
25140	84285	25141	1 x 1	0.73	¾	2.74	2¾
25145	84290	25146	1¼ x 1¼	0.77	¾	3.27	3¼
25150	84295	25151	1½ x 1½	0.72	¾	3.28	3¼
25155	84300	25156	2 x 2	0.76	¾	3.44	3 7/16

Viega MegaPress Adapter P x FPT – Models 4812XL /6612XL

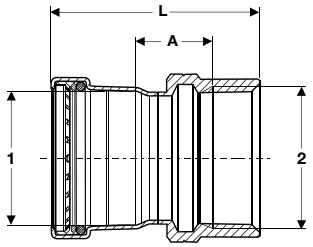

Part No.		Size (in)	A (in)		L (in)	
FKM	HNBR	1 2	Dec	Frac	Dec	Frac
26655	28755	2½ x 2½	1.13	1⅛	3.86	3⅞
26660	28760	3 x 3	1.17	1 3/16	4.49	4½
26665	28765	4 x 4	1.15	1⅛	5.42	5 7/16

MegaPress Reducing Adapter, Carbon Steel, P x FPT – Models 4812 / 5912 / 6612

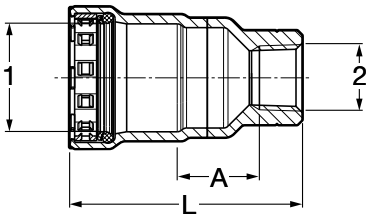

Part No.			Size (in)	A (in)		L (in)	
EPDM	FKM	HNBR	1 2	Dec	Frac	Dec	Frac
25575	84750	25576	¾ x ½	0.73	¾	2.43	2 7/16
25580	84755	25581	1 x ½	1.03	1	2.91	2 15/16
25585	84760	25586	1 x ¾	0.78	¾	2.68	2 11/16
25590	84765	25591	1¼ x ½	1.15	1⅛	3.50	3½
25595	84770	25596	1¼ x ¾	1.11	1⅛	3.48	3½
25600	84775	25601	1¼ x 1	0.76	¾	3.24	3¼
25605	84780	25606	1½ x ½	1.31	1 5/16	3.72	3¾
25610	84785	25611	1½ x ¾	1.27	1¼	3.70	3 11/16
25615	84790	25616	1½ x 1	1.11	1⅛	3.64	3⅝
25620	84795	25621	1½ x 1¼	0.86	⅞	3.41	3 7/16
25625	NA	25626	2 x ½	1.56	1 9/16	4.06	4 1/16
25630	84800	25631	2 x ¾	1.54	1 9/16	4.08	4 1/16
25635	84805	25636	2 x 1	1.35	1⅜	4.00	4
25640	NA	25641	2 x 1¼	1.28	1¼	3.93	3 15/16
25645	84810	25646	2 x 1½	1.03	1	3.70	3 11/16

MegaPress Coupling with Stop, Carbon Steel, P x P – Models 4815 / 5915 / 6615

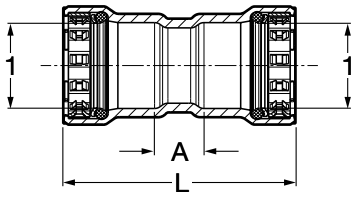

Part No.			Size (in)	A (in)		L (in)	
EPDM	FKM	HNBR	1	Dec	Frac	Dec	Frac
25000	84215	25001	½	0.56	9/16	2.70	2 11/16
22005	84220	22009	¾	0.63	⅝	2.94	2 15/16
25010	84225	25011	1	0.59	9/16	3.29	3 5/16
25015	84230	25016	1¼	0.70	11/16	4.34	4 5/16
25020	84235	25021	1½	0.89	⅞	4.63	4⅝
25025	84240	25026	2	0.77	¾	4.75	4¾

Viega MegaPress Coupling with Stop P x P – Models 4815XL / 6615XL

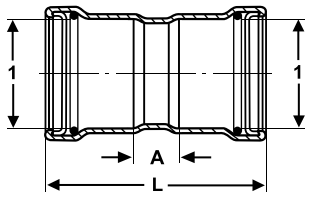

Part No.		Size (in)	A (in)		L (in)	
FKM	HNBR	1	Dec	Frac	Dec	Frac
26670	28770	2½	1.32	1 5/16	4.92	4 15/16
26675	28775	3	1.38	1⅜	5.98	6
26680	28780	4	1.57	1 9/16	7.87	7⅞

MegaPress Coupling No Stop, Carbon Steel, P x P – Models 4815.5 / 5915.5 / 6615.5

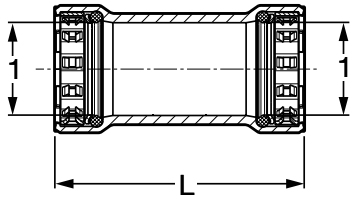

Part No.			Size (in)	L (in)	
EPDM	FKM	HNBR	1	Dec	Frac
25030	84130	25031	½	2.71	2 11/16
25035	84135	25036	¾	2.94	2 15/16
25040	84140	25041	1	3.29	3 5/16
25045	84145	25046	1¼	4.34	4 5/16
25050	84150	25051	1½	4.63	4⅝
25055	84155	25056	2	4.74	4¾

Viega MegaPress Coupling No Stop P x P – Models 4815.5XL / 6615.5XL

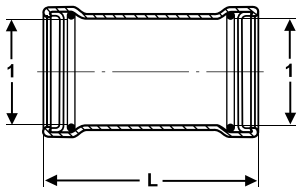

Part No.		Size (in)	L (in)	
FKM	HNBR	1	Dec	Frac
26685	28785	2½	4.92	4 15/16
26690	28790	3	5.98	6
26695	28795	4	7.91	7 15/16

MegaPress Extended No Stop Coupling, Carbon Steel, P x P – Models 4815.3 / 6615.3

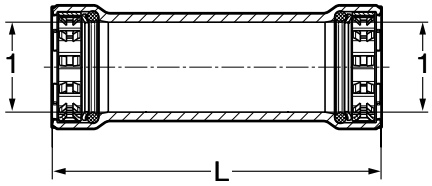

Part No.		Size (in)	L (in)	
EPDM	HNBR	1	Dec	Frac
25070	25071	½	3.82	3 13/16
25075	25076	¾	4.00	4
25080	25081	1	4.38	4⅜
25085	25086	1¼	5.33	5 5/16
25090	25091	1½	5.44	5 7/16
25095	25096	2	5.63	5⅝

MegaPress Reducer, Carbon Steel, FTG x P – Models 4815.1 / 5915.1 / 6615.1

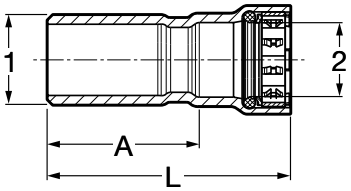

Part No.			Size (in)	A (in)		L (in)	
EPDM	FKM	HNBR	1 2	Dec	Frac	Dec	Frac
26000	84160	26001	¾ x ½	1.78	1¾	2.85	2⅞
26005	84165	26006	1 x ½	2.14	2⅛	3.21	3 3/16
26010	84170	26011	1 x ¾	2.09	2 1/16	3.24	3¼
NA	84175	NA	1¼ x ¾	2.81	2 13/16	3.97	4
26015	84180	26016	1¼ x 1	2.63	2⅝	3.98	4
26020	84185	26021	1½ x ¾	2.98	3	4.13	4⅛
26025	84190	26031	1½ x 1	2.81	2 13/16	4.16	4 3/16
26030	84195	26026	1½ x 1¼	2.70	2 11/16	4.52	4½
26035	84200	26036	2 x 1	3.14	3⅛	4.49	4½
26040	84205	26041	2 x 1¼	3.02	3	4.83	4 13/16
26045	84210	26046	2 x 1½	2.96	2 15/16	4.83	4 13/16

Viega MegaPress Reducer FTG x P – Models 4815.1XL / 6615.1XL

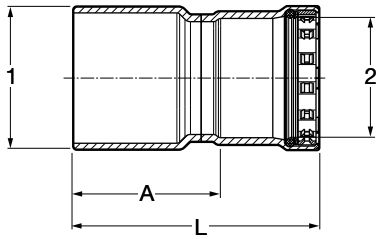

Part No.		Size (in)	A (in)		L (in)	
FKM	HNBR	1 2	Dec	Frac	Dec	Frac
26700	28800	2½ x 1	3.49	3½	4.83	4 13/16
26705	28805	2½ x 1¼	3.37	3⅜	5.19	5 3/16
26710	28810	2½ x 1½	3.30	3 5/16	5.17	5 3/16
26715	28815	2½ x 2	2.97	3	4.96	4 15/16
26720	28820	3 x 1¼	4.16	4 3/16	5.98	6
26725	28825	3 x 1½	4.08	4 1/16	5.95	5 15/16
26730	28830	3 x 2	3.76	3¾	5.75	5¾
26735	28835	3 x 2½	3.75	3¾	5.55	5 9/16
26740	28840	4 x 1½	5.60	5⅝	7.47	7½
26745	28845	4 x 2	5.28	5¼	7.27	7¼
26750	28850	4 x 2½	5.27	5¼	7.06	7 1/16
26755	28855	4 x 3	5.03	5	7.33	7 5/16

MegaPress Reducer, Carbon Steel, P x P – Models 4815.2 / 6615.2

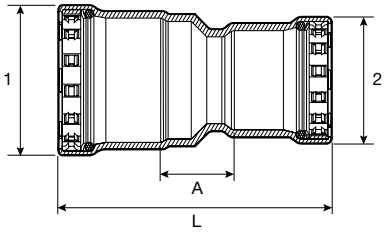

Part No.		Size (in)	A (in)		L (in)	
EPDM	HNBR	1 2	Dec	Frac	Dec	Frac
25930	25931	¾ x ½	1.20	1 3/16	3.43	3 7/16
25935	25936	1 x ½	1.37	1⅜	3.79	3 13/16
25940	25941	1 x ¾	1.24	1¼	3.74	3¾
25945	25946	1¼ x ¾	1.40	1⅜	4.37	4⅜
25950	25951	1¼ x 1	1.23	1¼	4.39	4⅜
25955	25956	1½ x 1¼	1.21	1 3/16	4.90	4⅞
25960	25961	2 x 1¼	1.45	1 7/16	5.27	5¼
25965	25966	2 x 1½	1.43	1 7/16	5.26	5¼

MegaPress Union, Carbon Steel, P x P – Model 4860 / 5960

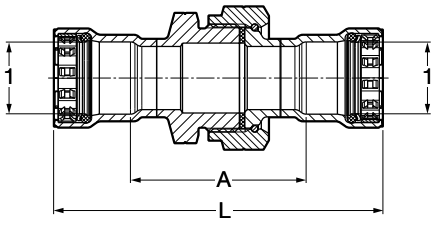

Part No.		Size (in)	A (in)		L (in)	
EPDM	FKM	1	Dec	Frac	Dec	Frac
25700	84815	½	2.35	2⅜	4.50	4½
25705	84820	¾	2.67	2 11/16	4.99	5
25710	84825	1	2.65	2⅝	5.34	5 5/16
25715	84830	1¼	2.84	2 13/16	6.48	6½
25720	84835	1½	2.89	2⅞	6.63	6⅝
25725	84840	2	3.92	3 15/16	7.89	7⅞

MegaPress Union, Carbon Steel, P x FPT – Model 4862

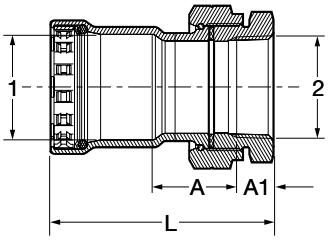

Part No.	Size (in)	A (in)		A1 (in)		L (in)	
EPDM	1 2	Dec	Frac	Dec	Frac	Dec	Frac
25650	½ x ½	1.25	1¼	0.54	9/16	2.85	2⅞
25655	¾ x ¾	1.48	1½	0.56	9/16	3.20	3 3/16
25660	1 x 1	1.37	1⅜	0.66	11/16	3.38	3⅜
25665	1¼ x 1¼	1.53	1½	0.68	11/16	4.03	4
25670	1½ x 1½	1.55	1 9/16	0.68	11/16	4.10	4⅛
25675	2 x 2	2.33	2 5/16	0.70	11/16	5.00	5

MegaPress Union, Carbon Steel, P x P – Model 6660

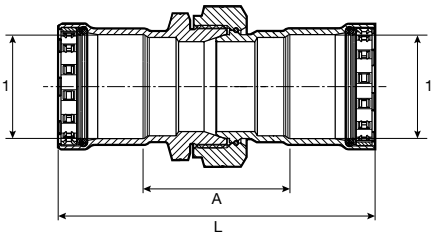

Part No.	Size (in)	A (in)		L (in)	
HNBR	1	Dec	Frac	Dec	Frac
25701	½	2.33	2 5/16	4.47	4½
25706	¾	2.67	2 11/16	4.98	5
25711	1	2.60	2⅝	5.29	5 5/16
25716	1¼	2.85	2⅞	6.49	6½
25721	1½	2.90	2⅞	6.64	6⅝
25726	2	3.41	3 7/16	7.35	7⅜

MegaPress Union, Carbon Steel, P x FPT – Model 6662

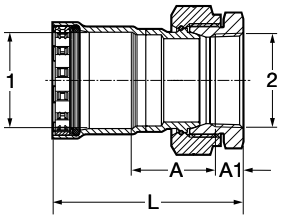

Part No.	Size (in)	A (in)		A1 (in)		L (in)	
HNBR	1 2	Dec	Frac	Dec	Frac	Dec	Frac
25651	½ x ½	1.38	1⅜	0.54	9/16	2.98	3
25656	¾ x ¾	1.64	1⅝	0.56	9/16	3.35	3⅜
25661	1 x 1	1.62	1⅝	0.66	11/16	3.63	3⅝
25666	1¼ x 1¼	1.85	1⅞	0.68	11/16	4.35	4⅜
25671	1½ x 1½	1.80	1 13/16	0.68	11/16	4.35	4⅜
25676	2 x 2	2.11	2⅛	0.70	11/16	4.77	4¾

MegaPress Flange Class 150 Raised Face, Carbon Steel, P – Models 5959.5 / 6659.5

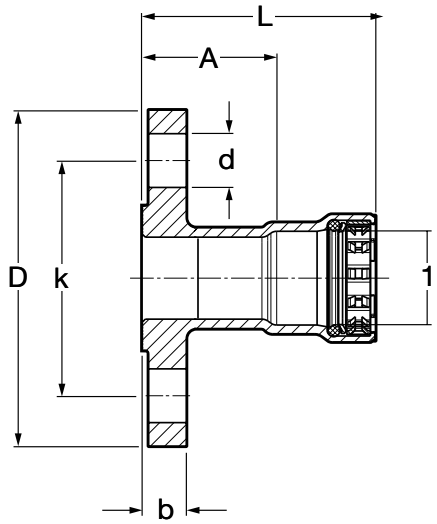

Part No.		Size (in)	A (in)		L (in)		b (in)		k (in)		D (in)		d (in)	
FKM	HNBR	1	Dec	Frac	Dec	Frac	Dec	Frac	Dec	Frac	Dec	Frac	Dec	Frac
84845	25761	½	1.51	1½	2.58	2 9/16	0.46	7/16	2.36	2⅜	3.54	5 9/16	0.63	⅝
84850	25766	¾	1.58	1 9/16	2.74	2¾	0.52	½	2.76	2¾	3.94	3 15/16	0.63	⅝
84855	25771	1	1.75	1¾	3.10	3⅛	0.58	9/16	3.11	3⅛	4.33	4 5/16	0.63	⅝
84860	25776	1¼	1.89	1⅞	3.71	3 11/16	0.64	⅝	3.50	3½	4.53	4½	0.63	⅝
84865	25781	1½	2.06	2 1/16	3.93	3 15/16	0.70	11/16	3.86	3⅞	4.92	4 15/16	0.63	⅝
84870	25786	2	2.07	2 1/16	4.06	4 1/16	0.77	¾	4.76	4¾	5.91	5 15/16	0.75	¾

Viega MegaPress Adapter Flange Class 150 Raised Face, P – Model 4859.5XL

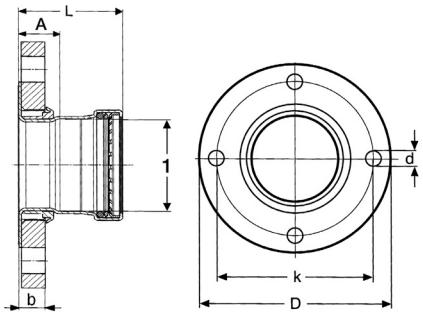

Part No.	Size (in.)	A (in)		L (in)		b (in)		k (in)		D (in)		d (in)	
FKM	1	Dec	Frac	Dec	Frac	Dec	Frac	Dec	Frac	Dec	Frac	Dec	Frac
26775	2½	1.54	1 9/16	3.33	3 5/16	0.89	⅞	5.51	5½	7.09	7 1/16	0.75	¾
26780	3	1.65	1⅝	3.95	3 15/16	0.96	15/16	5.98	6	7.48	7½	0.75	¾
26785	4	1.63	1⅝	4.80	4 13/16	0.96	15/16	7.52	7½	9.06	9 1/16	0.75	¾

Viega MegaPressG Adapter Flange Class 125 Flat Face, P – Model 6659.5XL

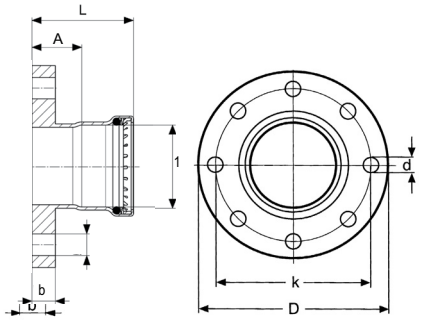

Part No.	Size (in.)	A (in)		L (in)		b (in)		k (in)		D (in)		d (in)	
HNBR	1	Dec	Frac	Dec	Frac	Dec	Frac	Dec	Frac	Dec	Frac	Dec	Frac
28875	2½	1.54	1 9/16	3.33	3 5/16	0.89	⅞	5.51	5½	7.09	7 1/16	0.75	¾
28880	3	1.65	1⅝	3.95	3 15/16	0.96	15/16	5.98	6	7.48	7½	0.75	¾
28885	4	1.63	1⅝	4.80	4 13/16	0.96	15/16	7.52	7½	9.06	9 1/16	0.75	¾

MegaPress Cap, Carbon Steel, P x Cap – Models 4856 / 5956 / 6656

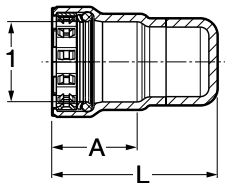

Part No.			Size (in)	A (in)		L (in)	
EPDM	FKM	HNBR	1	Dec	Frac	Dec	Frac
25730	84100	25731	½	1.07	1 1/16	2.14	2⅛
25735	84105	25736	¾	1.16	1 3/16	2.26	2¼
25740	84110	25741	1	1.35	1⅜	2.43	2 7/16
25745	84115	25746	1¼	1.82	1 13/16	2.93	2 15/16
25750	84120	25751	1½	1.87	1⅞	3.02	3
25755	84125	25756	2	1.99	2	3.11	3⅛

Viega MegaPress Cap P – Models 4856.1XL / 6656.1XL

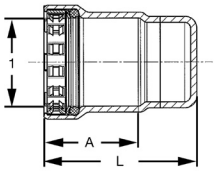

Part No.		Size (in)	A (in)		L (in)	
FKM	HNBR	1	Dec	Frac	Dec	Frac
26760	28860	2½	1.80	1 13/16	3.27	3¼
26765	28865	3	2.30	2 5/16	3.78	3¾
26770	28870	4	3.18	3 3/16	4.65	4⅝

MegaPress Ball Valve, Carbon Steel, P x P – Models 5970 / 5970XL

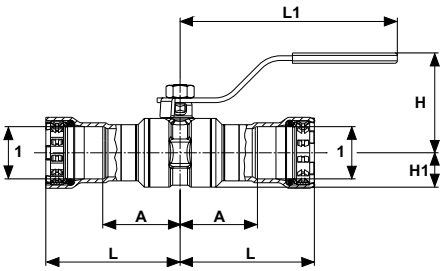

Part No.		Size (in)	A (in)		L (in)		L1 (in)		H (in)		H1 (in)	
EPDM	FKM	1	Dec	Frac	Dec	Frac	Dec	Frac	Dec	Frac	Dec	Frac
28915	28945	½	1.535	1 9/16	2.618	2⅝	4.567	4 9/16	1.992	2	0.634	⅝
28920	28950	¾	1.638	1⅝	2.795	2 13/16	4.567	4 9/16	2.102	2⅛	0.748	¾
28925	28955	1	1.811	1 13/16	3.157	3 3/16	5.768	5¾	2.469	2½	0.878	⅞
28930	28960	1¼	1.976	2	3.795	3 13/16	5.768	5¾	2.709	2 11/16	1.142	1⅛
28935	28965	1½	2.142	2⅛	4.012	4	6.122	6⅛	3.016	3	1.358	1⅜
28940	28970	2	2.382	2⅜	4.370	4⅜	6.122	6⅛	3.315	3 5/16	1.654	1⅝
NA	86790	2½	3.720	3¾	5.520	5½	11.090	11 1/16	5.130	5⅛	2.390	2⅜
NA	86795	3	4.070	4 1/16	6.400	6⅜	11.090	11 1/16	5.520	5½	2.800	2 13/16
NA	86800	4	4.670	4 11/16	7.840	7 13/16	13.060	13 1/16	6.700	6 11/16	3.450	3 7/16

MegaPress 304 FKM Ball Valve – Models 4170 / 4170 XL

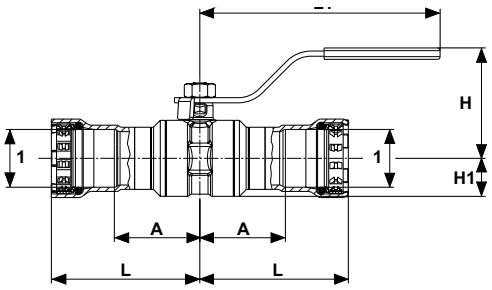

Part No.	Size (in)	A (in)		L (in)		L1 (in)		H (in)		H1 (in)	
FKM	1	Dec	Frac	Dec	Frac	Dec	Frac	Dec	Frac	Dec	Frac
29005	½	1.535	1 9/16	2.657	2 11/16	4.567	4 9/16	1.984	2	0.634	⅝
29010	¾	1.626	1⅝	2.823	2 13/16	4.567	4 9/16	2.098	2 1/16	0.748	¾
29015	1	1.811	1 13/16	3.197	3 3/16	5.766	5¾	2.465	2 7/16	0.878	⅞
29020	1¼	1.957	1 15/16	3.815	3 13/16	5.768	5¾	2.685	2 11/16	1.142	1⅛
29025	1½	2.142	2⅛	4.051	4	6.122	6⅛	3.020	3	1.358	1⅜
29030	2	2.382	2⅜	4.390	4⅜	6.122	6⅛	3.315	3 5/16	1.654	1⅝
86820	2½	3.717	3 11/16	5.516	5 9/16	11.087	11	5.142	5⅛	2.256	2¼
86825	3	4.094	4	6.398	6⅜	11.087	11	5.535	5 9/16	2.657	2⅝
86830	4	4.638	4⅝	7.843	7 13/16	13.055	13	6.697	6 11/16	3.346	3⅜

MegaPress 3-Piece Ball Valve, Carbon Steel, P x P – Models 5975.8 / 5975.8XL

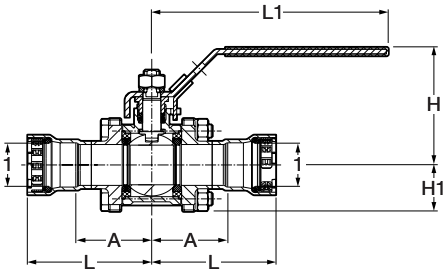

Part No.		Size (in)*	A (in)		L (in)		L1 (in)		H (in)		H1 (in)	
EPDM	FKM	1	Dec	Frac	Dec	Frac	Dec	Frac	Dec	Frac	Dec	Frac
28500	86400	½	1.72	1¾	2.80	2 13/16	5.88	5⅞	2.85	2⅞	1.04	1 1/16
28501	86405	¾	1.91	1 15/16	3.06	3 1/16	5.88	5⅞	2.93	2 15/16	1.16	1 3/16
28502	86410	1	2.19	2 3/16	3.54	3 9/16	7.54	7 9/16	3.33	3 5/16	1.40	1⅜
28503	86415	1¼	2.50	2½	4.31	4 5/16	7.54	7 9/16	3.57	3 9/16	1.57	1 9/16
28504	86420	1½	2.92	2 15/16	4.79	4 13/16	7.54	7 9/16	3.89	3⅞	1.83	1 13/16
28505	86425	2	3.09	3 1/16	5.07	5 1/16	7.54	7 9/16	3.89	3⅞	1.83	1 13/16
NA	86680	2½	3.74	3¾	5.54	5 9/16	11.06	11 1/16	5.08	5 1/16	2.28	2¼
NA	86685	3	4.37	4⅜	6.67	6 11/16	11.06	11 1/16	5.47	5½	2.68	2 11/16
NA	86690	4	4.88	4⅞	8.06	8 1/16	13.07	13 1/16	6.89	6⅞	3.79	3 13/16

Sizes up to 3" have 4-bolt flanges; 4" has 6-bolt flanges.

Viega MegaPress FKM Swing Check Valve – Model 5974.2

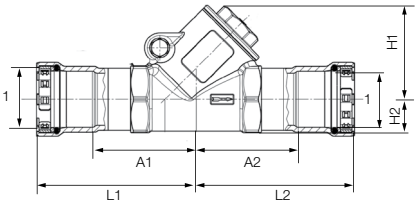

Part No.	Size (in) 1	H1 (in) Dec	H1 (in) Frac	H2 (in) Dec	H2 (in) Frac	L1 (in) Dec	L1 (in) Frac	L2 (in) Dec	L2 (in) Frac	A1 (in) Dec	A1 (in) Frac	A2 (in) Dec	A2 (in) Frac	Cv (US gal/min)
87200	½	1.65	1⅝	0.63	⅝	3.07	3 1/16	3.07	3 1/16	0.47	½	2.01	2	5.50
87205	¾	1.97	2	0.75	¾	3.35	3⅜	3.35	3⅜	0.55	9/16	3.35	3⅜	9.50
87210	1	2.28	2¼	0.91	15/16	3.86	3⅞	3.86	3⅞	0.75	¾	2.48	2½	16.80
87215	1¼	2.72	2¾	1.10	1⅛	4.57	4 9/16	4.57	4 9/16	0.91	15/16	2.76	2¾	27.50
87220	1½	2.72	2¾	1.10	1⅛	4.57	4 9/16	4.57	4 9/16	0.91	15/16	2.76	2¾	40.80
87225	2	3.86	3⅞	1.34	1 5/16	5.28	5¼	5.28	5¼	1.30	1 5/16	3.31	3 5/16	76.30

Viega MegaPress FKM Strainer Valve – Model 5981.1

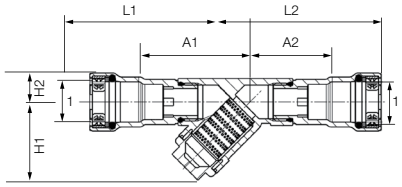

Part No.	Size (in) 1	H1 (in) Dec	H1 (in) Frac	H2 (in) Dec	H2 (in) Frac	L1 (in) Dec	L1 (in) Frac	L2 (in) Dec	L2 (in) Frac	A1 (in) Dec	A1 (in) Frac	A2 (in) Dec	A2 (in) Frac	Cv (US gal/min)
87140	½	1.69	1 11/16	0.63	⅝	3.50	3½	2.87	2⅞	2.44	2 7/16	1.81	1 13/16	3.7
87145	¾	2.01	2	0.75	¾	3.98	4	3.19	3 3/16	2.83	2 13/16	2.05	2 1/16	6.2
87150	1	2.52	2½	0.91	15/16	4.72	4¾	3.50	3½	3.39	3⅜	2.17	2 3/16	8.3
87155	1¼	2.76	2¾	1.10	1⅛	5.51	5½	4.13	4⅛	3.66	3 11/16	2.28	2¼	14.6
87160	1½	3.19	3 3/16	1.22	1¼	5.83	5 13/16	4.25	4¼	3.98	4	2.36	2⅜	21.4
87165	2	3.54	3 9/16	1.46	1 7/16	6.61	6⅝	4.57	4⅝	4.61	4⅝	2.60	2⅝	33.4

5 Limited Warranty – Viega Metal Systems

Subject to the conditions and limitations in this Limited Warranty ("Warranty"), Viega LLC ("Viega") warrants to end users, installers, and distributors in the United States and Canada that the following products ("Viega Products") will be free of failure caused by a manufacturing defect from the date of installation for the time periods specified in the table included in this Warranty.

This Warranty will be valid only in the event the following conditions have been met: The Viega Products have been properly installed (1) under normal conditions of use; (2) under applications approved by Viega; (3) under Viega-specified system operating conditions; (4) using tools compatible with Viega systems; and (5) in alignment with Viega's listings.

Further, you have a right to a remedy under this Warranty only if the Viega Product failure resulted from a manufacturing defect in the Viega Product and if the failure occurred during the applicable warranty period. You do not have a remedy under this Warranty if the failure was caused by (1) components other than those manufactured and/or sold by Viega; (2) failure to design, install, inspect, test, or maintain the Viega Product in accordance with Viega's installation and product instructions in effect at the time of installation; (3) use of Viega Products under non-recommended system operating conditions (e.g., water pressures, temperatures, or other external chemical or physical conditions); (4) improper handling or protection of the Viega Product prior to, during, or after installation (e.g., inadequate freeze protection or exposure to environmental conditions not recommended for the application); or (5) acts of nature, including, without limitation, earthquakes, fire, or weather damage.

In the event of a failure of a Viega Product covered by this Warranty, it is the duty and responsibility of the end user to take appropriate measures to mitigate all potential damage, including making timely repairs to the system in which the Viega Product has been installed. The part or parts which you claim failed must be kept and returned to Viega for testing. Viega may be contacted at the phone number or mailing address below. All warranty claims must be made within 30 calendar days after the failure has (or should reasonably have) been discovered. You should be prepared to ship, at your expense, the Viega Product which you claim failed due to a manufacturing defect, with documentation of the installation date and the amount spent on any repair or replacement if performed by you. Within a reasonable time after receiving the Viega Product, Viega will investigate the cause of the failure, which includes the right to inspect the Viega Product at a Viega location and reasonable access to the site of any alleged damage. Viega will notify you in writing of the results of its review.

In the event Viega determines that the failure was the result of a manufacturing defect in the Viega Product covered by this Warranty and all conditions of this Warranty have been met, your SOLE AND EXCLUSIVE REMEDY under this Warranty shall be the reimbursement for the reasonable costs of repair or replacement of the Viega Product itself. VIEGA SHALL NOT BE LIABLE FOR ANY CONSEQUENTIAL OR OTHER SIMILAR DAMAGES (E.G., ECONOMIC LOSS, WATER OR PROPERTY DAMAGE, OR MOLD REMEDIATION) UNDER ANY LEGAL THEORY AND WHETHER ASSERTED BY DIRECT ACTION, FOR CONTRIBUTION, INDEMNITY, OR OTHERWISE.

THIS WARRANTY IS IN LIEU OF ALL OTHER WARRANTIES, EXPRESS, OR IMPLIED, INCLUDING, WITHOUT LIMITATION, THE IMPLIED WARRANTIES OF MERCHANTABILITY AND FITNESS FOR A PARTICULAR PURPOSE OR ANY STATUTE OF LIMITATIONS RELATING TO SUCH WARRANTIES. Viega will be responsible for remedies only if all conditions of this Warranty have been met. Other than this Warranty, Viega does not authorize any person, company, contractor, or distributor to create any additional warranty, obligation, or liability in connection with the Viega Product.

This Warranty gives you specific legal rights, and you also may have other rights which may vary from state to state. This Warranty shall be interpreted and applied under the law of the state in which the product is installed and is intended as a COMMERCIAL WARRANTY.

Continued on next page.

Warranty Period by Product and Application Type		
Viega Product Line	**Residential and Commercial**	**Industrial[1] and Marine[2]**
ProPress® copper fittings	50 years	2 years
ProPress 316 fittings and tubing	10 years	
MegaPress® fittings	15 years	
MegaPress FKM fittings		
MegaPress 304 FKM fittings		
MegaPress 316 fittings		
MegaPress 316 FKM fittings		
MegaPressG[3] fittings		
MegaPress CuNi fittings		
All valves	5 years	

[1]Industrial applications are defined as non-residential and non-commercial applications not normally accessible to the general public, including manufacturing, mining, process, or fabrication environments, or applications with components that have been cleaned for oxygen service.

[2]Marine applications are defined as mobile structures used to navigate water or stationary structures in water.

[3]MegaPressG products covered by this Warranty must be installed by a licensed contractor in compliance with applicable building, permit, and inspection codes. See product instructions for additional information.

Viega LLC
585 Interlocken Blvd.
Broomfield, CO 80021

Phone (800) 976-9819
www.viega.us