Lochinvar®
HIGH EFFICIENCY BOILERS & WATER HEATERS

# Replacement Parts List

*PARTS & SERVICE DEPARTMENT*
**Nashville, Tennessee**
**877-554-5544 • Fax: 615-882-2918**
**parts_team@lochinvar.com**
**www.Lochinvar.com**

## Indoor/Outdoor AQUAS™
### COMMERCIAL POOL PACKAGE
### APO 750 - 6000
**Series 200 - 201**

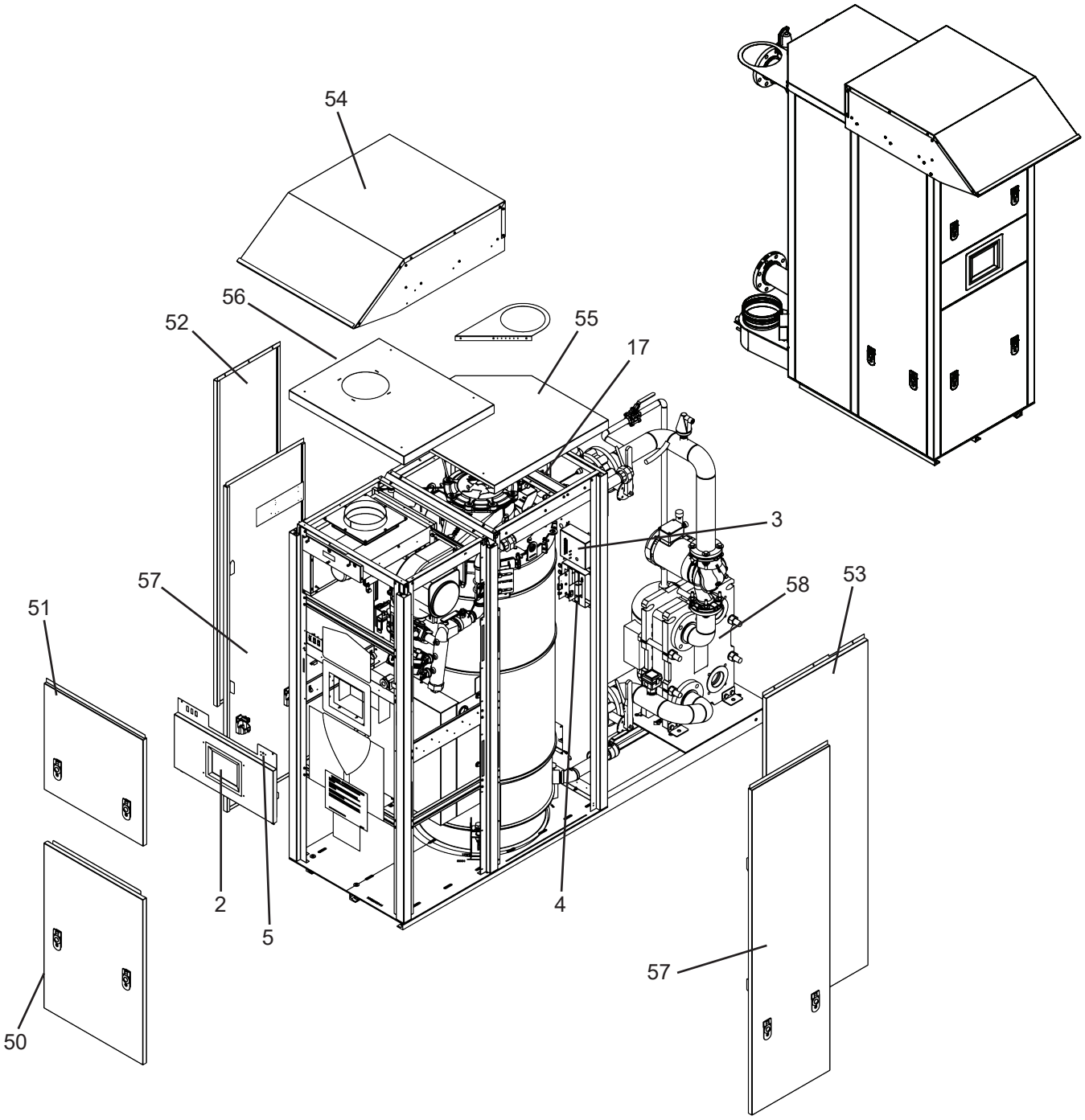

## DISPLAY PANEL

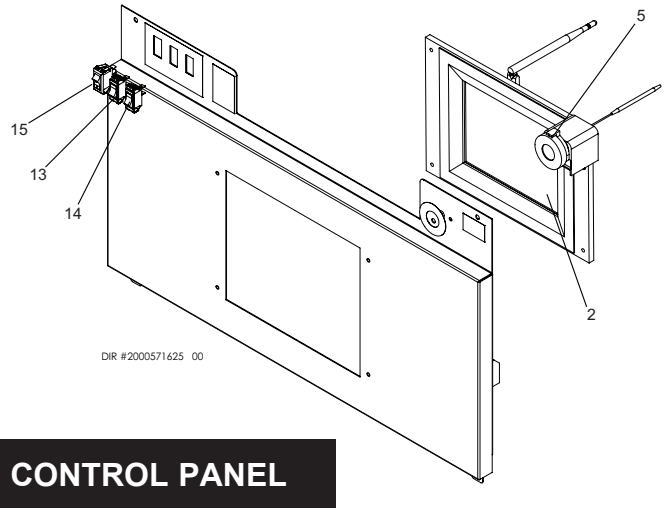


## HEAT EXCHANGER

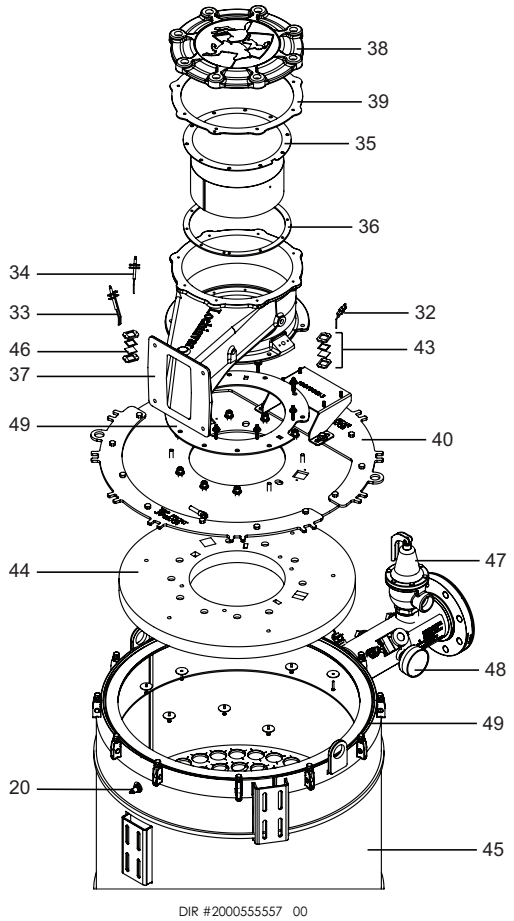


## CONTROL PANEL

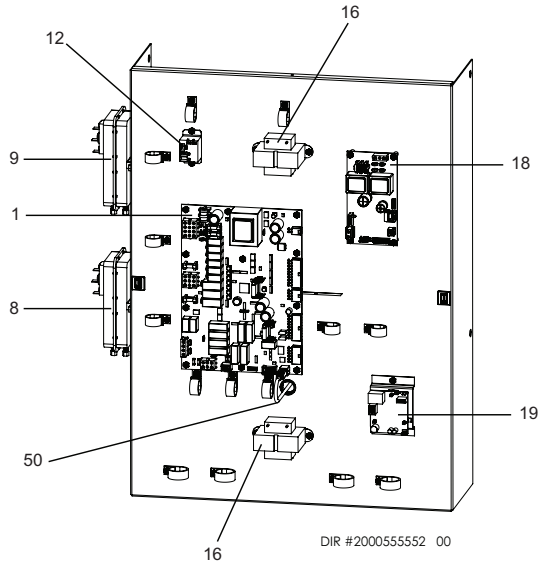


## GAS TRAIN

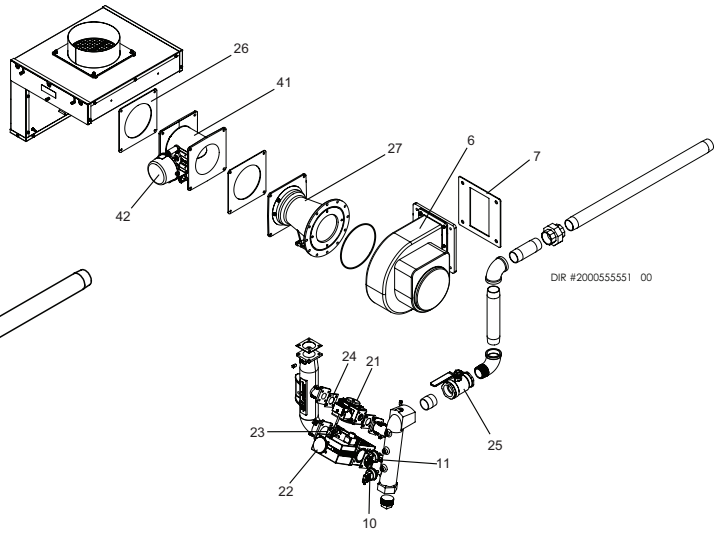


## GAS TRAIN

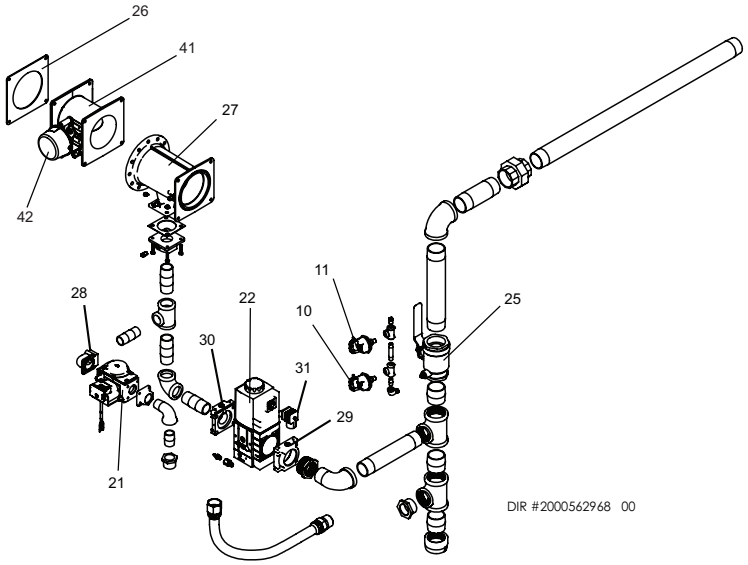

| ITEM NO. | PART NO. | DESCRIPTION | MODEL |
|---|---|---|---|
| | | **CONTROLS (CONTINUED)** | |
| 1 | 100302184 | INTEGRATED CONTROL BOARD | OF 751 - 1251 |
| 1 | 100302185 | INTEGRATED CONTROL BOARD | OF 1501 - 2001 |
| 2 | 100311038 | USER INTERFACE DISPLAY, LCD | ALL |
| - | 100311232 | GASKET, USER INTERFACE DISPLAY | ALL |
| 3 | **100208481*** | LOW VOLTAGE CONTROL BOARD | ALL |
| 4 | **100208476*** | LOW VOLTAGE CONTROL BOARD | ALL |
| - | **100208552*** | SENSOR, SYSTEM / INLET | ALL |
| - | **100208557*** | SENSOR, DUAL OUTLET | ALL |
| - | **100208558*** | SENSOR, PREMIX THERMOSTAT LIMIT | ALL |
| 5 | **100271315*** | HIGH LIMIT | ALL |
| - | **100233695*** | HIGH LIMIT THERMOSTAT BULBWELL, 3/8 NPT | ALL |
| 6 | 100073294 | FAN ASSEMBLY | OF 751 - 1251 |
| 6 | 100267460 | FAN ASSEMBLY | OF 1501 - 2001 |
| 7 | **100208089*** | GASKET, FAN | OF 751 - 1251 |
| 7 | **100277796*** | GASKET, FAN | OF 1501 - 2001 |
| 8 | **100277772*** | PRESSURE SWITCH - 4.1" WATER COLUMN | ALL |
| 9 | **100289704*** | PRESSURE SWITCH - 5.8" WATER COLUMN | OF 751 - 1251 |
| 9 | **100289706*** | PRESSURE SWITCH - 2.5" WATER COLUMN | OF 1501 - 2001 |
| 10 | **100208385*** | PRESSURE SWITCH - 3.0" WATER COLUMN | ALL |
| 11 | **100274744*** | PRESSURE SWITCH - 27.0" WATER COLUMN | ALL |
| 12 | **100208509*** | RELAY, 120VAC, 60HZ, 10.8 AMP | ALL |
| 13 | 100277797 | MOMENTARY SWITCH, RED - 20 AMP, 125 VOLT | ALL |
| 14 | 100277798 | MOMENTARY SWITCH, BLACK - 20 AMP, 125 VOLT | ALL |
| 15 | 100271316 | ON / OFF SWITCH, RED | ALL |
| 16 | 100208230 | TRANSFORMER, 24V, 40VA | ALL |
| 17 | 100274743 | TRANSFORMER, SPARK | ALL |
| 18 | 100275047 | BACNET BOARD (BEGINNING SERIAL #4015) | ALL |
| 19 | 100173747 | LOW WATER CUTOFF, MANUAL RESET | ALL |
| 20 | 100277756 | PROBE, LWCO | ALL |
| - | 100277801 | BOOT, LWCO | ALL |
| | | **GAS TRAIN ASSEMBLIES** | |
| 21 | 100073358 | GAS VALVE ASSEMBLY, NAT - SMALL | OF 751 |
| 21 | 100073359 | GAS VALVE ASSEMBLY, NAT - SMALL | OF 1001 |
| 21 | 100073360 | GAS VALVE ASSEMBLY, NAT - SMALL (SERIES 100 & 101) | OF 1251 |
| 21 | 100267412 | GAS VALVE ASSEMBLY, NAT - SMALL (SERIES 100 & 101) | OF 1501 |
| 21 | 100267413 | GAS VALVE ASSEMBLY, NAT - SMALL (SERIES 100 & 101) | OF 1751 |
| 21 | 100267414 | GAS VALVE ASSEMBLY, NAT - SMALL (SERIES 100 & 101) | OF 2001 |
| 21 | 100310375 | GAS VALVE ASSEMBLY, NAT - SMALL (SERIES 110 & 111) | ALL |
| 21 | 100073364 | GAS VALVE ASSEMBLY, LP - SMALL | OF 751 |
| 21 | 100073365 | GAS VALVE ASSEMBLY, LP - SMALL | OF 1001 |
| 21 | 100073366 | GAS VALVE ASSEMBLY, LP - SMALL (SERIES 100 & 101) | OF 1251 |
| 21 | 100267415 | GAS VALVE ASSEMBLY, LP - SMALL (SERIES 100 & 101) | OF 1501 |
| 21 | 100267416 | GAS VALVE ASSEMBLY, LP - SMALL (SERIES 100 & 101) | OF 1751 |
| 21 | 100267417 | GAS VALVE ASSEMBLY, LP - SMALL (SERIES 100 & 101) | OF 2001 |
| 21 | 100310375 | GAS VALVE ASSEMBLY, LP - SMALL (SERIES 110 & 111) | ALL |
| 22 | 100073370 | GAS VALVE ASSEMBLY, NAT - LARGE | OF 751 |
| 22 | 100073371 | GAS VALVE ASSEMBLY, NAT - LARGE | OF 1001 |
| 22 | 100073372 | GAS VALVE ASSEMBLY, NAT - LARGE (SERIES 100 & 101) | OF 1251 |
| 22 | 100267418 | GAS VALVE ASSEMBLY, NAT - LARGE (SERIES 100 & 101) | OF 1501 |
| 22 | 100267419 | GAS VALVE ASSEMBLY, NAT - LARGE (SERIES 100 & 101) | OF 1751 |
| 22 | 100310377 | GAS VALVE ASSEMBLY, NAT - LARGE (SERIES 110 & 111) | OF 1251-1751 |
| 22 | 100267420 | GAS VALVE ASSEMBLY, NAT - LARGE (SERIES 100 & 101) | OF 2001 |
| 22 | 100171973 | GAS VALVE ASSEMBLY, NAT - LARGE (SERIES 110 & 111) | OF 2001 |
| 22 | 100073549 | GAS VALVE ASSEMBLY, LP - LARGE | OF 751 |
| 22 | 100073550 | GAS VALVE ASSEMBLY, LP - LARGE | OF 1001 |
| 22 | 100073551 | GAS VALVE ASSEMBLY, LP - LARGE (SERIES 100 & 101) | OF 1251 |
| 22 | 100267421 | GAS VALVE ASSEMBLY, LP - LARGE (SERIES 100 & 101) | OF 1501 |
| 22 | 100267422 | GAS VALVE ASSEMBLY, LP - LARGE (SERIES 100 & 101) | OF 1751 |
| 22 | 100310377 | GAS VALVE ASSEMBLY, LP - LARGE (SERIES 110 & 111) | OF 1251-1751 |
| 22 | 100267423 | GAS VALVE ASSEMBLY, LP - LARGE (SERIES 100 & 101) | OF 2001 |
| 22 | 100171973 | GAS VALVE ASSEMBLY, LP - LARGE (SERIES 110 & 111) | OF 2001 |
| 23 | **100208105*** | GASKET, GAS VALVE / VENTURI (SERIES 100 & 101) | ALL |
| 23 | **100208105*** | GASKET, GAS VALVE / VENTURI (SERIES 110 & 111) | ALL |
| 24 | **100289499*** | GASKET, GAS TRAIN (SERIES 100 & 101) | ALL |
| 25 | 100294593 | 1-1/4" GAS SHUT-OFF VALVE W/ TAP (SERIES 100 & 101) | OF 751 - 1251 |
| 25 | 100288549 | 1-1/2" GAS SHUT-OFF VALVE W/ TAP (SERIES 100 & 101) | OF 1501 - 2001 |

**PLEASE HAVE MODEL AND SERIAL NUMBER WHEN ORDERING PARTS**
***ITEMS DENOTE SUGGESTED INVENTORY PARTS**

| ITEM NO. | PART NO. | DESCRIPTION | MODEL |
|---|---|---|---|
| | | **GAS TRAIN ASSEMBLIES (CONTINUED)** | |
| 25 | 100288549 | 1-1/2" GAS SHUT-OFF VALVE W/ TAP (SERIES 110 & 111) | OF 1251-2001 |
| 26 | **100208089*** | GASKET, VENTURI | ALL |
| 27 | 100288548 | VALVE, VENTURI | OF 751 |
| 27 | 100288481 | VALVE, VENTURI | OF 1001 - 1251 |
| 27 | 100294592 | VALVE, VENTURI | OF 1501 - 1751 |
| 27 | 100274223 | VALVE, VENTURI | OF 2001 |
| 28 | 100287996 | FLANGE, GAS VALVE, 3/4 NPT, 90 DEG (SERIES 110 & 111) | OF 1251-2001 |
| 29 | 100310379 | FLANGE, GAS VALVE, 1-1/2 NPT, DUNGS (SERIES 110 & 111) | OF 1251-1751 |
| 30 | 100310376 | SHUTTER, GAS VALVE, 1 NPT (SERIES 110 & 111) | OF 1251-1751 |
| 30 | 100274758 | SHUTTER, GAS VALVE, 1-1/2 NPT (SERIES 110 & 111) | OF 2001 |
| 31 | 100310378 | CONNECTOR, DUNGS, GAS VALVE (SERIES 110 & 111) | OF 1251-2001 |
| | | **PILOT AND BURNER ASSEMBLIES** | |
| 32 | **100073343*** | SENSOR, FLAME W/ GASKET | ALL |
| - | 100233664 | GASKET, FLAME SENSOR | ALL |
| 33 | **100073342*** | IGNITOR W/ GASKET | OF 751 - 1251 |
| 33 | **100265150*** | IGNITOR W/ GASKET | OF 1501 - 2001 |
| 34 | **100279407*** | FLAME SENSOR, REAR, W/ GASKET & SCREWS | ALL |
| - | 100233662 | GASKET, IGNITOR | ALL |
| 35 | 100072640 | BURNER W/ GASKET | OF 751 |
| 35 | 100072641 | BURNER W/ GASKET | OF 1001 |
| 35 | 100073280 | BURNER W/ GASKET | OF 1251 |
| 35 | 100073281 | BURNER W/ GASKET | OF 1501 |
| 35 | 100073282 | BURNER W/ GASKET | OF 1751 |
| 35 | 100073283 | BURNER W/ GASKET | OF 2001 |
| 36 | **100277963*** | GASKET, BURNER | ALL |
| 37 | 100073768 | GAS/AIR MANIFOLD W/ GASKET | OF 751 - 1251 |
| 37 | 100073794 | GAS/AIR MANIFOLD W/ GASKET | OF 1501 - 2001 |
| 38 | 100288523 | COVER, MANIFOLD | ALL |
| 39 | **100277962*** | GASKET, MANIFOLD COVER | ALL |
| 40 | 100075411 | HEAT EXCHANGER DOOR ASSEMBLY | OF 751 |
| 40 | 100075413 | HEAT EXCHANGER DOOR ASSEMBLY | OF 1001 |
| 40 | 100076515 | HEAT EXCHANGER DOOR ASSEMBLY | OF 1251 |
| 40 | 100267481 | HEAT EXCHANGER DOOR ASSEMBLY | OF 1501 |
| 40 | 100267482 | HEAT EXCHANGER DOOR ASSEMBLY | OF 1751 |
| 40 | 100267483 | HEAT EXCHANGER DOOR ASSEMBLY | OF 2001 |
| 41 | 100161834 | AIR METERING VALVE | OF 751 |
| 41 | 100161835 | AIR METERING VALVE | OF 1001 |
| 41 | 100161837 | AIR METERING VALVE | OF 1251 |
| 41 | 100161836 | AIR METERING VALVE | OF 1501 - 1751 |
| 41 | 100161838 | AIR METERING VALVE | OF 2001 |
| | | **MISCELLANEOUS** | |
| 42 | 100163214 | SIGHT GLASS KIT | ALL |
| 43 | 100288672 | FIBERBOARD, BURNER | OF 751 |
| 43 | 100288673 | FIBERBOARD, BURNER | OF 1001 |
| 43 | 100288674 | FIBERBOARD, BURNER | OF 1251 |
| 43 | 100288675 | FIBERBOARD, BURNER | OF 1501 |
| 43 | 100288676 | FIBERBOARD, BURNER | OF 1751 |
| 43 | 100288677 | FIBERBOARD, BURNER | OF 2001 |
| 44 | 100288679 | INSULATION, HEX WRAP | OF 751 |
| 44 | 100288680 | INSULATION, HEX WRAP | OF 1001 |
| 44 | 100288681 | INSULATION, HEX WRAP | OF 1251 |
| 44 | 100288682 | INSULATION, HEX WRAP | OF 1501 |
| 44 | 100288683 | INSULATION, HEX WRAP | OF 1751 |
| 44 | 100289400 | INSULATION, HEX WRAP | OF 2001 |
| 45 | 100233667 | GASKET, SIGHT GLASS | ALL |
| - | 100294589 | AIR INLET COVER | ALL |
| 46 | 100208448 | PRESSURE RELIEF VALVE, 1" X 1-1/4", 50 PSI | ALL |
| 47 | 100376494 | GAUGE, T&P, 0-75 PSI, 50-320F, 2.5" x 1/2", IP65 | ALL |
| - | **100208561*** | SENSOR, FLUE TEMP | ALL |
| - | 100277775 | GAS CUT OFF VALVE 1-1/2” | ALL |
| - | 100277718 | CONDENSATE TRAP | ALL |

**PLEASE HAVE MODEL AND SERIAL NUMBER WHEN ORDERING PARTS**
***ITEMS DENOTE SUGGESTED INVENTORY PARTS**

| ITEM NO. | PART NO. | DESCRIPTION | MODEL |
|---|---|---|---|
| | | **MISCELLANEOUS (CONTINUED)** | |
| 48 | **100289492*** | KIT, GASKET SET (SIGHT GLASS / AIR MANIFOLD / HEX PLATE) | OF 751 |
| 48 | **100289493*** | KIT, GASKET SET (SIGHT GLASS / AIR MANIFOLD / HEX PLATE) | OF 1001 |
| 48 | **100289494*** | KIT, GASKET SET (SIGHT GLASS / AIR MANIFOLD / HEX PLATE) | OF 1251 |
| 48 | **100289495*** | KIT, GASKET SET (SIGHT GLASS / AIR MANIFOLD / HEX PLATE) | OF 1501 |
| 48 | **100289496*** | KIT, GASKET SET (SIGHT GLASS / AIR MANIFOLD / HEX PLATE) | OF 1751 |
| 48 | **100289497*** | KIT, GASKET SET (SIGHT GLASS / AIR MANIFOLD / HEX PLATE) | OF 2001 |
| - | **100289433*** | AIR FILTER, 1" X 14" X 14" | OF 751 - 1251 |
| - | **100302182*** | AIR FILTER, 14" X 20" | OF 1501 - 2001 |
| 49 | 100277806 | USB CABLE | ALL |
| - | **100277807*** | GASKET, AIR INLET COVER | ALL |
| - | 100294590 | PLATE ASSEMBLY, INLET ADAPTER | ALL |
| - | 100276810 | CABLE, RIBBON | ALL |
| - | 100208633 | WIRE HARNESS, SPARK ELECTRODE | ALL |
| - | 100208631 | WIRE HARNESS, FLAME SENSOR ELECTRODE | ALL |
| - | **100208808*** | FUSE, 1.25A / 250V | ALL |
| - | **100208231*** | FUSE, 3.15A / 250V | ALL |
| - | **100208232*** | FUSE, 5A / 250V | ALL |
| - | 100277791 | CONDENSATE HOSE, BRAIDED, 3/8" | ALL |
| - | 100277792 | CONDENSATE HOSE, BRAIDED, 1" | ALL |
| - | 100274793 | REFERENCE HOSE, 1/8" (ORDER BY FOOT) | ALL |
| - | 100208336 | ALUMINUM TUBING, 1/4" | ALL |
| - | 100302180 | COMPRESSION LATCH | ALL |
| - | 100274737 | ANTENNA, USB ADAPTER, WIRELESS | ALL |
| - | 100289696 | CABLE, USB, 2.0, 12" | ALL |
| - | 100289697 | CABLE, USB, 2.0, 60" | ALL |
| - | 100288513 | PANEL MOUNTING CABLE | ALL |
| - | 100301827 | OUTDOOR KIT | ALL |
| | | **JACKET ASSEMBLIES** | |
| 50 | 100302143 | JACKET, BOTTOM DOOR | ALL |
| 51 | 100302144 | JACKET, TOP DOOR | ALL |
| 52 | 100302146 | JACKET, LEFT SIDE | OF 751 - 1251 |
| 53 | 100302147 | JACKET, RIGHT SIDE | OF 751 - 1251 |
| 54 | 100302148 | JACKET, TOP, OUTDOOR KIT | OF 751 - 1251 |
| 55 | 100302173 | JACKET, TOP REAR | OF 1501 - 2001 |
| 56 | 100302174 | JACKET, TOP FRONT | OF 1501 - 2001 |
| 57 | 100302175 | JACKET, FRONT LEFT & RIGHT SIDE | OF 1501 - 2001 |
| | | **OUTDOOR AQUAS COMPONENTS** | |
| 58 | 100377179 | HEX, PLATE / FRAME, HEXONIC, TI, SW, 3", ASME, 34 PLATE | APO 1000 - 2000 |
| - | 100300582 | TANK, EXPANSION, 8 GAL, TTA - 20 | ALL |
| - | 100300583 | GASKET, PIPING ASSEMBLY | APO 1000 - 1250 |
| - | 100300585 | GASKET, PIPING ASSEMBLY | APO 1500 - 2000 |
| - | 100300618 | VALVE, AIR VENT, 3/4 NPT, 150 PSI | ALL |
| - | 100300586 | RELAY, PILOT CONTROL, 10 AMP | ALL |
| - | 100276808 | HI-LIMIT SWITCH, 115 DEG. | ALL |

**PLEASE HAVE MODEL AND SERIAL NUMBER WHEN ORDERING PARTS**
***ITEMS DENOTE SUGGESTED INVENTORY PARTS**

# Notes

# Notes

© 02/24 - Printed in U.S.A.