Manual Sink Faucets
786-HGN2AE3AB

CHICAGO FAUCETS®
Geberit Group

Product Type

Deck-mounted manual faucet with adjustable centers

Features & Specifications

- Handles include color-coded index
- Fully adjustable, 6" - 26" centers
- 5-1/4" Rigid/swing gooseneck spout
- Pressure compensating Softflo® aerator, 2.2 GPM
- Vandal Proof 4" Wristblade handle (pair)
- Quaturn® compression operating cartridge, left-hand
- Quaturn® compression operating cartridge, right-hand
- ECAST® design provides durable cast brass construction with total lead content equal to or less than 0.25% by weighted average
- Complies with the requirements of the Buy American Act of 1933.
- CFNow! Item Ships in 3 Days

Performance Specification

- Rated Operating Pressure: 20-125 PSI
- Rated Operating Temperature: 40-140°F

Warranty

- 5-Year Limited Cartridge Warranty
- Lifetime Limited Faucet Warranty
- 1-Year Limited Finish Warranty

Codes & Standards

- ES ASME A112.18.1/CSA B125.1
- ADA ANSI/ICC A117.1
- NOTE: Per the California Energy Commission (CEC), this fitting is not intended to be sold in California. See the CEC website for details.
- ES NSF/ANSI/CAN 61: Q ≤ 1

Job Name _____

Item Number _____

Section/Tag _____

Model Specified _____

Architect _____

Engineer _____

Contractor _____

[ ] Submitted as Shown [ ] Submitted with Variations

Date _____

ECAST

ECAST products are intended for installation where state laws and local codes mandate lead content levels or in any location where lead content is a concern.

BUY AMERICAN ACT COMPLIANT

2100 South Clearwater Drive
Des Plaines, IL
P: 847/803-5000
F: 847/803-5454
Technical: 800/TEC-TRUE
www.chicagofaucets.com

786-HGN2AE3AB

CHICAGO FAUCETS
Geberit Group

Architect/Engineer Specification

Chicago Faucets No. 786-HGN2AE3AB, Sink Faucet for hot and cold water, concealed deck-mount with fully adjustable 6"-26" centers, chrome plated. Rigid/swing gooseneck spout, 5-1/4" center-to-center. 2.2 GPM (8.3 L/min) pressure compensating Softflo® aerator. 4" metal, vandal-proof, wristblade handles with sixteen-point, tapered broach and secured blue and red index buttons. Quaturn® rebuildable compression cartridge, opens and closes 90°, closes with water pressure, features square, tapered stem. 1/2" NPSM supply inlets and coupling nut for 3/8" or 1/2" flexible riser. Mounting hardware included. ECAST® construction with less than 0.25% lead content by weighted average. This product meets ADA ANSI/ICC A117.1 requirements and is tested and certified to industry standards: ASME A112.18.1/CSA B125.1, and Certified to NSF/ANSI 61, Section 9.

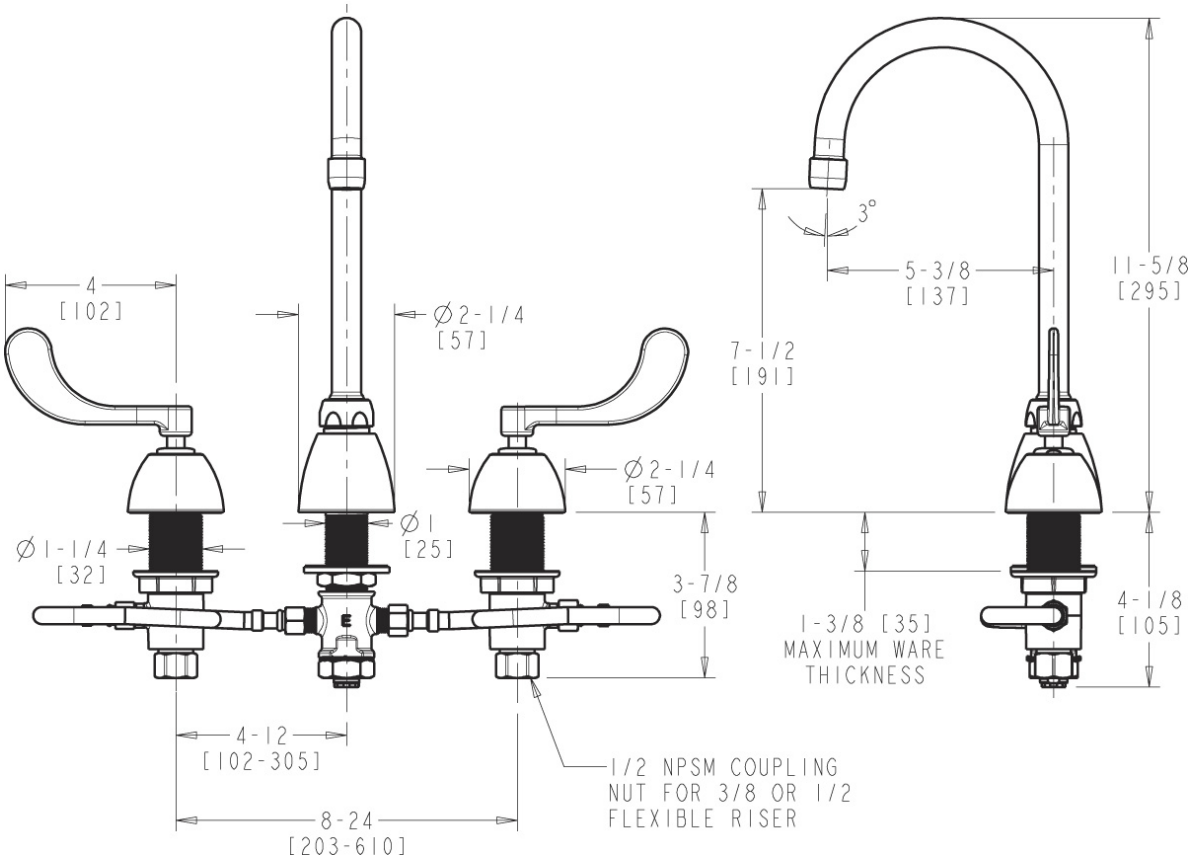

Operation and Maintenance

Installation should be in accordance with local plumbing codes. Flush all pipes thoroughly before installation. After installation, remove spout outlet or flow control and flush faucet thoroughly to clear any debris. Care should be taken when cleaning the product. Do not use abrasive cleaners, chemicals or solvents as they can result in surface damage. Use mild soap and warm water for cleaning and protecting the life of Chicago Faucet products. For specific operation and maintenance refer to the installation instructions and repair parts documents that are located at www.chicagofaucets.com.

Chicago Faucets, member of the Geberit Group, is the leading brand of commercial faucets and fittings in the United States, offering a complete range of products for schools, laboratories, hospitals, office buildings, food service, airports and sport facilities. Call 1.800.TECTRUE or 1.847.803.5000 Option 1 for installation or other technical assistance.

2100 South Clearwater Drive
Des Plaines, IL
P: 847/803-5000
F: 847/803-5454
Technical: 800/TEC-TRUE
www.chicagofaucets.com