CRANE®

Energy Flow Solutions

Flowseal
High Performance Butterfly Valves

FLOWSEAL®

Flowseal high performance butterfly valves are available in sizes from 2" - 48" in ASME pressure classes 150, 300, and 600 and are available with a diverse range of actuation options.

Flowseal is a leading provider of soft seat, metal seat and fire-safe high performance butterfly valves. Our products are manufactured under an ISO 9001 Quality Assurance Program that assures each valve we produce meets or exceeds your application requirements.

Additionally, our Design and Manufacturing facility is certified to the Pressure Equipment Directive (PED), and Flowseal valves can be ordered as CE marked (see page 23).

Flowseal high performance butterfly valves are a standard in many industries including heating, ventilating and air conditioning, power generation, hydrocarbon processing, water and waste water treatment, and marine and commercial shipbuilding. Our products are also installed in applications as diverse as food and beverage processing, snowmaking and pulp and paper production. Configurations are available for harsh conditions as well as applications requiring nominal pressure and temperature ratings.

As part of Crane Valve Group, Flowseal high performance butterfly valves are backed by the resources and experience of one of the world's largest valve producers with a delivery and quality track record that is unparalleled in the industries we serve.

NOTE: In keeping with our policy of continuing improvement, we reserve the right to institute changes in design, material, dimensions, or specifications without notice and without incurring any obligation to make such changes and modifications on product previously or subsequently sold.

FLOWSEAL

High Performance Butterfly Valves

- Soft Seat
- Metal Seat
- Fire-Safe Seat
- ISO
- Marine

Electric Actuators

- On/Off
- Modulating

Pneumatic Actuators

- Spring-Return
- Double Acting

Vane Actuators

- Double Acting
- Failsafe

Manual Operators

- Series W Gear Operators*
- Levers

Typical Applications

- Hydrocarbon Processing
- Chemical/Petrochemical Processing
- Marine and Commercial Shipbuilding
- Power and Utilities
- Pulp and Paper

* For valves supplied with a chainwheel, the positive restraint option is recommended.

Unique Valve Seat Design — Soft Seat

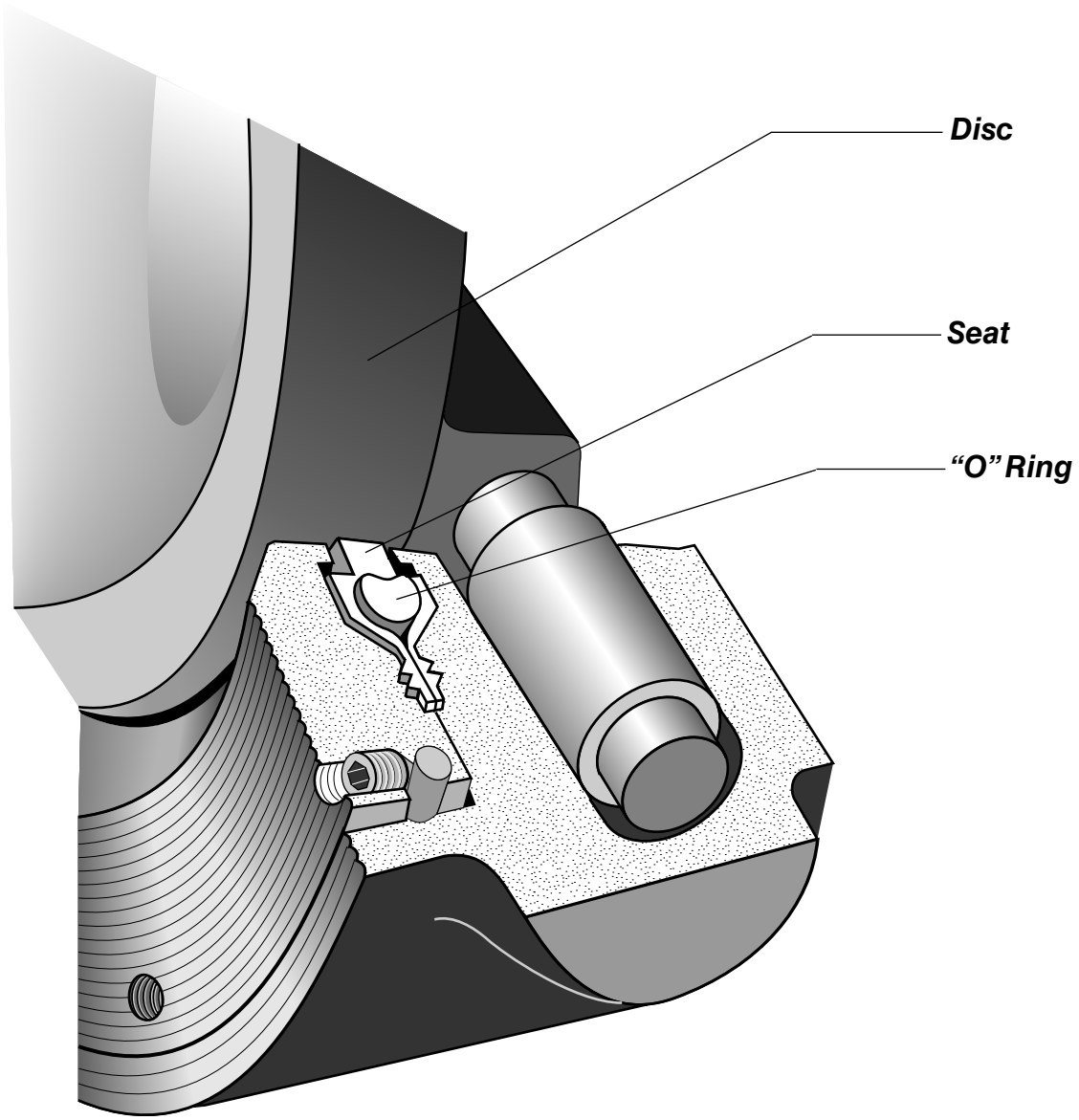

Flowseal is one of the world's leading manufacturers of high performance butterfly valves. Based on many years of research, development and field experience, the Flowseal design is superior to and more versatile than the High Performance Butterfly Valve design offered by other manufacturers.

The Flowseal Soft Seat valve provides a bi-directional bubble tight shutoff (zero leakage) by the use of a patented seat. This unique seat design creates a self-energized seal in vacuum-to-low pressure applications.

Under higher pressure conditions, the seat is also designed to permit, confine and direct movement of the soft seat against the disc edge, up to the full ASME Class 150, 300 and 600 Cold Working Pressures.

The Soft Seat is designed for high services with minimal wear and low torque. Seat replacement is a simple operation, requiring no special tools.

Principle of Seat Sealing — Soft Seat

DISC OPEN

In Figure 1, the disc and seat are not engaged. In this position, the shoulders of the seat are forced against the cavity shoulders by the compression of the o-ring.

The seat is recessed inside the seat cavity and acts as a gasket in the anchoring groove area. The seat cavity is sealed from exposure from the process fluid and protects the seat from abrasion and wear. The o-ring, which is completely encapsulated by the seat, is also isolated from exposure to the process fluid.

Figure 1

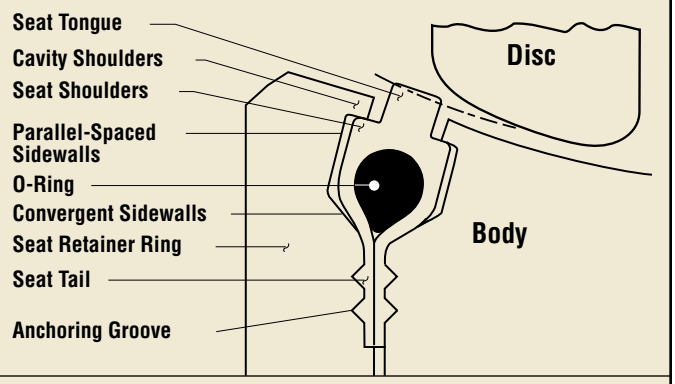

DISC CLOSED, Self-Energized Seal

In Figure 2, the Flowseal disc and seat are engaged, and the process fluid is under low pressure. The edge of the disc, with a larger diameter than the seat tongue, directs movement of the seat radially outward, causing the seat to compress against the convergent sidewalls of the cavity. The elastomeric o-ring imparts a mechanical pre-load between the disc and seat tongue as it is compressed and flattened by the disc; this is the self-energized mode for sealing at vacuum-to-60 psig.

As the seat moves radially outward, the seat shoulders move away from the cavity shoulders and open the cavity to the process media.

Figure 2

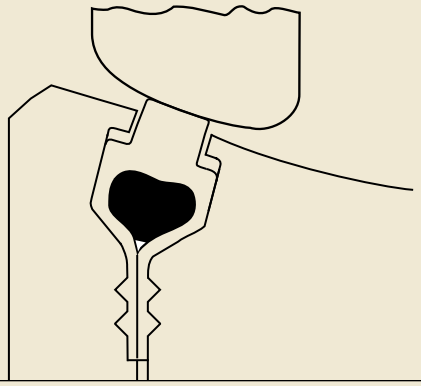

DISC CLOSED, Pressure-Energized Seal (Seat Upstream)

As line pressure increases, the process fluid enters the sidewall area and applies a load against the parallel-spaced sidewall and convergent sidewall of the seat. The seat and cavity design permits the seat to move axially to the downstream sidewall, but confines the movement and directs the movement radially inward towards the disc; the higher the line pressure, the tighter the seal between the disc and seat. Because the o-ring is elastic, it is able to flex and deform under loads and return to original shape after removal of the load; it is the rubber which deforms, not the thermoplastic material.

This dynamic seal, patented by Flowseal, is totally unique among high performance butterfly valves.

Figure 3

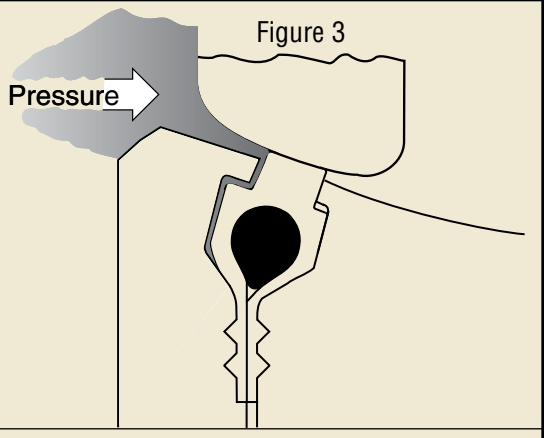

DISC CLOSED, Pressure-Energized Seal (Seat Downstream)

The Flowseal valve is bi-directional (in some instances, modifications may be required to operate this arrangement for dead end service). The cavity and seat sidewalls are symmetrically designed to permit, confine and direct movement of the seat to the disc to dynamically seal with line pressure in the reverse direction. The disc edge is the segment of a sphere, and the seat is angled towards the disc edge to seal with pipeline pressure in either direction.

Recommended installation direction is “SUS” (seat upstream), as in Figure 3.

Figure 4

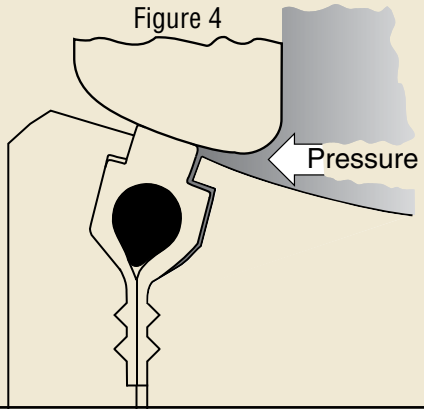

High Performance Butterfly

Valve Components — Soft Seat

KEY
Square key valve-to-operator connection provides an externally controlled failure point upon over-torquing.

GLAND FLANGE
Applies load against packing gland to prevent external leakage. Fully adjustable.

PACKING
Chevron design TFE prevents external leakage out valve neck to full ASME hydrostatic shell test pressures (150% of C.W.P.).

WEDGE RING
Stainless steel band wedged between valve body and retainer ring by set screws to lock seat and retainer ring in position on valve sizes 2" through 30". Socket head cap screws are used on valve sizes 36" and larger.

SET SCREWS
Cone point screws force wedge ring outward to lock seat retainer in position on valve sizes 2" through 30" wafer. Socket head cap screws are used on valve sizes 36" and larger and all DDES lug valves.

OVERTRAVEL STOP
Prevents disc from rotating into the wrong quadrant.

SOFT-SEAT
Patented bi-directional seat with encapsulated elastomeric o-ring core for resiliency. Common seat materials include TFE, RTFE and UHMWPE.

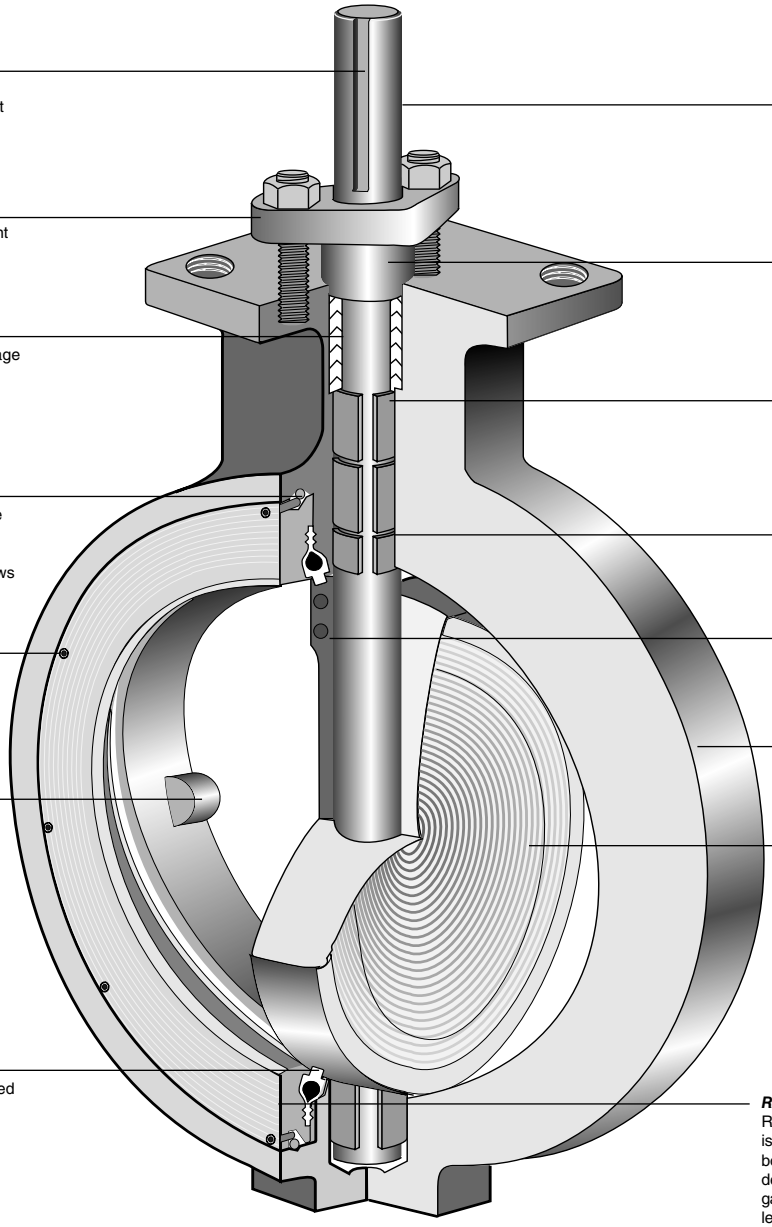

BLOW OUT PROOF SHAFT
Solid shaft provides alignment and rigid support for disc.

PACKING GLAND
Separate part from gland flange, preventing uneven load distribution against packing.

BEARINGS
Both above and below the disc, bearings are of composite design: PTFE bonded to epoxy-glass filament wound ring. Used to align shaft, with high capacity, low wear, and low friction coefficient.

DISC SPACERS
Disc is centered by use of thrust spacers around shaft in sizes 2" to 5". Disc position stops or thrust bolt arrangements are used for larger valve sizes.

WEDGE PINS
Provide positive mechanical attachment of disc to shaft.

BODY
ASME B16.34 design in either wafer or lug configuration.

DISC
360° uninterrupted spherical edge for sealing. Profile is designed for maximum flow and equal percentage control.

RETAINER RING
Retains seat in valve. Standard surface finish is 125 to 200 AARH and is compatible with both standard gaskets and spiral wound gasket designs. Outside diameter is recessed within gasket sealing surface to prevent external leakage.

End Seal Variation

The ASME 150 14" through 30" sizes feature a two-piece shaft design. The lower shaft utilizes an end seal in the body to prevent external leakage.
The component parts include an end seal, an end cap and end cap bolts.

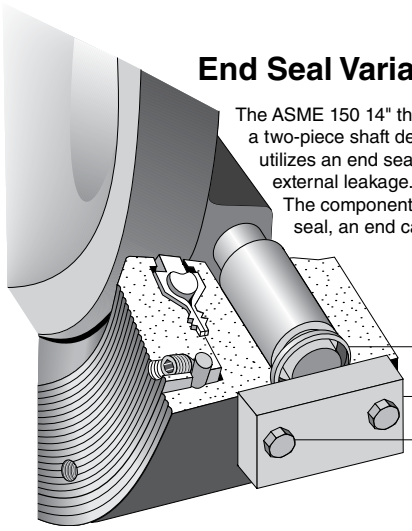

Lower Packing Variation

The ASME 150 14" through 48"; ASME 300 14" through 30"; ASME 600 10" through 16" sizes feature a two-piece shaft design which utilizes a lower packing seal in the valve body to prevent external leakage.
The component parts are of the same design used in the packing assembly in the top of the valve body neck.

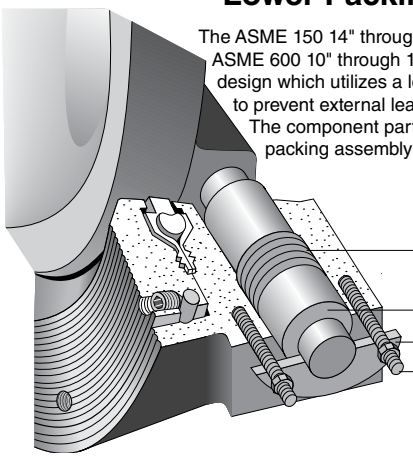

Pressure/Temperature Ratings Soft Seat

PRESSURE/TEMPERATURE RATINGS

As temperature increases, the pressure retaining capability of materials decreases. The graph below illustrates the pressure/temperature ratings of the Flowseal ASME Class 150, Class 300 and Class 600.

The heavy lines define the ratings of the carbon steel and stainless steel valve body (or “shell”) in conformance to ASME B16.34. The shaded areas define the ratings of the TFE and RTFE Seat materials.

Seat ratings are based on differential pressure with the disc in the fully closed position.*

Steam Service

TFE seated valves are rated for 50 psi saturated steam.

Valves with “O” seat configuration (RTFE seat / AFLAS O-ring) are rated to 100 psi steam service.

ASME B16.34 Body and Flowseal Soft Seat Pressure - Temperature Ratings

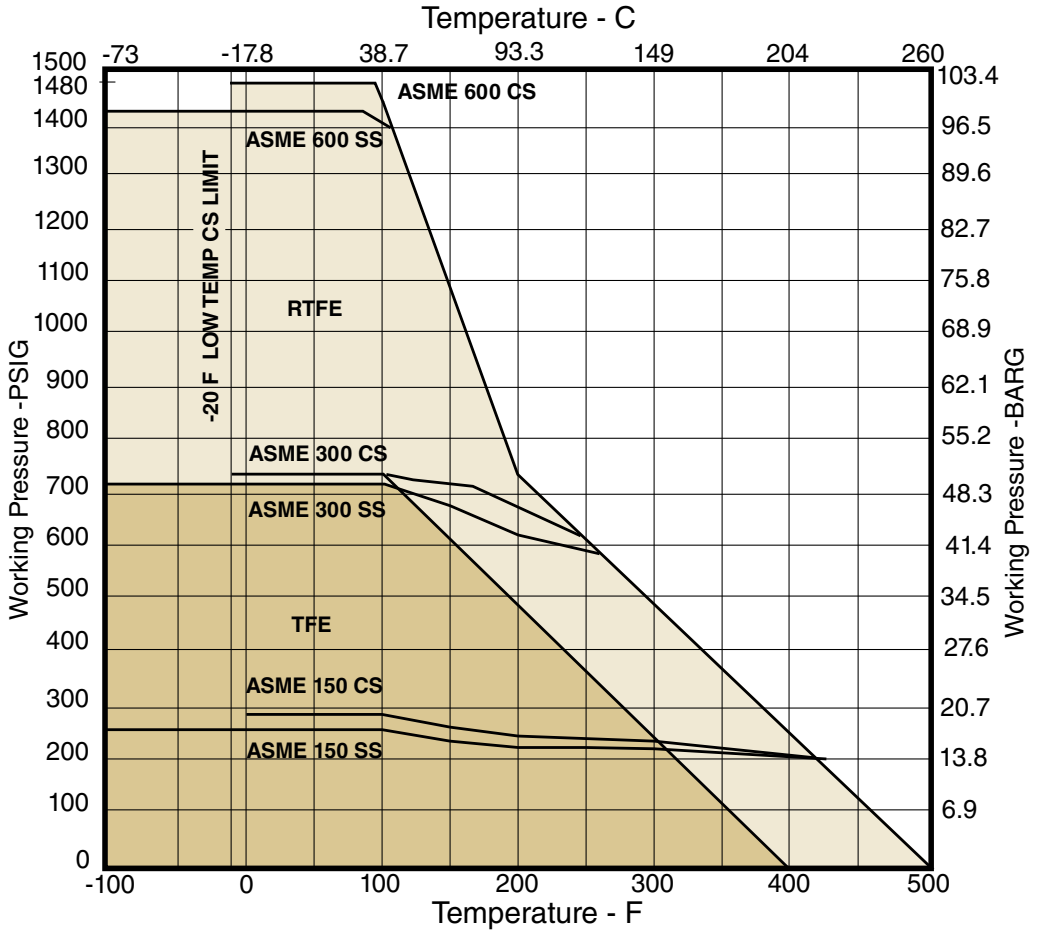

*Shaft Materials other than 17-4 PH or Monel® will affect working pressure ratings. Please consult factory.

High Performance Butterfly

Dimensions — Soft Seat

NOTE: See page 29 for complete mounting pad dimensional details.

WAFER

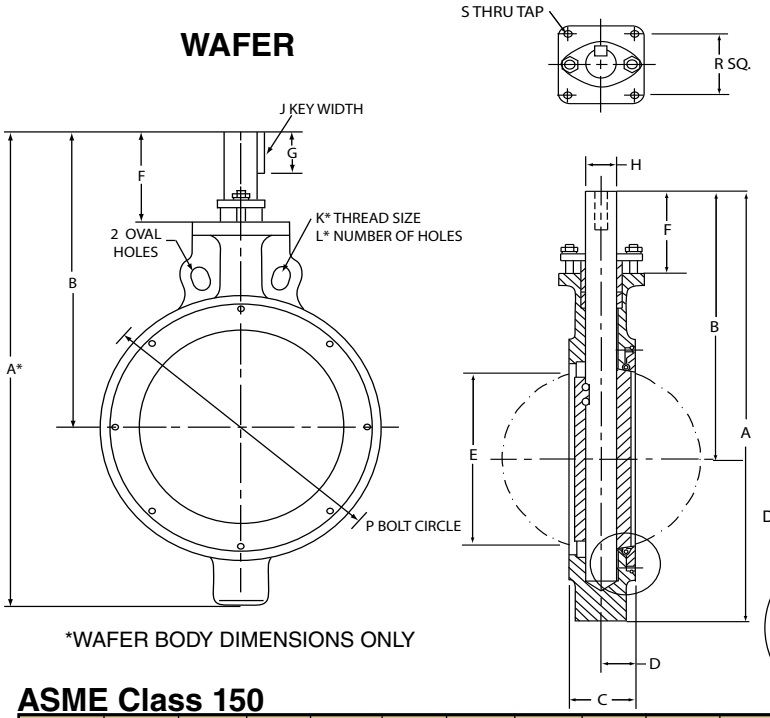

*WAFER BODY DIMENSIONS ONLY

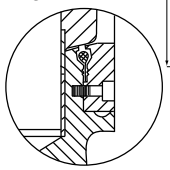

LUG

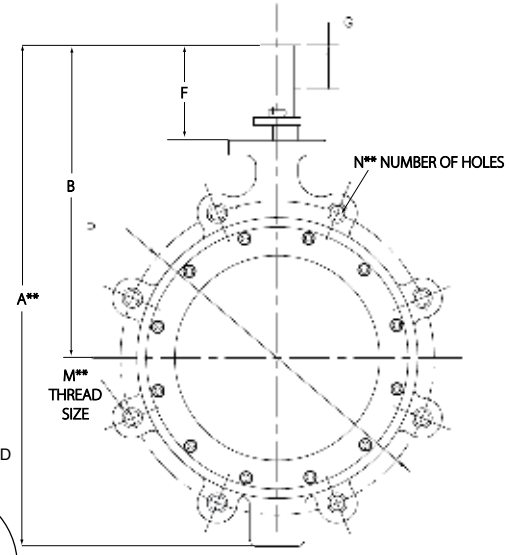

**LUG BODY DIMENSIONS ONLY

ASME Class 150

VALVE SIZE	WAFER A*	LUG A**	B	C	D	E	F	G	H	J	K*	L*	M**	N**	P	R	S	WEIGHT (LBS.) WAFER	WEIGHT (LBS.) LUG
2"	10.59	10.59	7.59	1.75	1.06	1.72	3.34	.88	.500	3/16	–	–	5/8–11	4	4.750	2.25	3/8-16	8	11
2.5"	10.30	10.30	7.59	1.88	1.09	2.09	3.34	.88	.500	3/16	–	–	5/8–11	4	5.500	2.25	3/8–16	8	11
3"	11.60	11.98	8.60	1.92	1.20	2.75	3.60	1.19	.625	3/16	–	–	5/8–11	4	6.000	2.25	3/8–16	11	13
3.5"	11.97	11.97	8.72	2.05	1.30	3.19	3.60	1.19	.625	3/16	–	–	5/8–11	8	7.000	2.25	3/8–16	14	17
4"	12.92	13.55	9.42	2.13	1.26	3.62	3.67	1.19	.625	3/16	–	–	5/8–11	8	7.500	2.25	3/8–16	17	25
5"	14.53	15.16	10.28	2.25	1.34	4.55	3.81	1.25	.750	1/4	–	–	3/4–10	8	8.500	2.25	3/8–16	20	30
6"	15.69	15.93	10.81	2.29	1.38	5.55	3.81	1.25	.750	1/4	–	–	3/4–10	8	9.500	2.25	3/8–16	30	35
8"	17.81	17.94	11.93	2.50	1.49	7.28	3.80	1.25	1.000	3/8	–	–	3/4–10	8	11.750	2.25	3/8–16	44	48
10"	19.85	20.85	12.97	2.81	1.70	9.20	4.09	1.50	1.250	3/8	–	2	7/8–9	12	14.250	3.25	3/8–16	71	91
12"	24.96	24.96	15.46	3.23	1.86	11.15	4.83	2.25	1.500	3/8	–	2	7/8–9	12	17.000	3.25	3/8–16	110	127
14"	27.14	27.14	16.07	3.62	2.19	12.76	4.82	2.25	1.500	3/8	–	4	1–8	12	18.750	3.25	3/8–16	135	183
16"	31.66	31.66	19.61	4.00	2.31	14.58	6.92	2.50	1.750	1/2	–	4	1–8	16	21.250	4.25	1/2–13	182	250
18"	34.53	34.53	21.35	4.50	2.45	16.38	7.35	3.25	2.000	1/2	–	4	1-1/8–8	16	22.750	4.25	1/2–13	234	305
20"	36.70	36.70	22.76	5.00	2.94	18.38	7.63	3.00	2.250	3/4	1-1/8–8	4	1-1/8–8	20	25.000	5.00	3/4–10	320	414
24"	41.57	41.57	25.13	6.06	3.12	21.88	7.88	3.25	2.500	3/4	1-1/4–8	4	1-1/4–8	20	29.500	5.00	3/4–10	505	702
30"	52.08	52.08	29.35	6.75	3.53	28.00	8.73	4.50	3.000	3/4	1-1/4–8	4	1-1/4–8	28	36.000	5.00	3/4–10	925	1130
36"	64.75	64.75	32.64	8.38	4.34	33.66	8.14	3.50	3.750	1	1-1/2–8	4	1-1/2–8	32	42.750	7.00	1–8	1630	1890
42"	73.24	73.24	37.62	9.25	5.03	40.31	9.62	5.00	4.500	1	1-1/2–8	4	1-1/2–8	36	49.500	7.00	1–8	2475	2700
48"	80.13	80.13	41.88	10.62	5.62	45.25	10.63	6.00	5.000	1-1/4	1-1/2–8	4	1-1/2–8	44	56.000	9.00	1–8	2815	3085

Dimensions — Soft Seat

ASME Class 300

VALVE SIZE	WAFER	LUG																WEIGHT (LBS.)	
	A*	A**	B	C	D	E	F	G	H	J	K*	L*	M**	N**	P	R	S	WAFER	LUG
2"	10.59	10.59	7.59	1.75	1.06	1.72	3.34	.88	.500	3/16	–	–	5/8-11	8	5.000	2.25	3⁄8–16	8	11
2.5"	10.30	10.30	7.59	1.88	1.09	2.09	3.34	.88	.500	3/16	–	–	3/4-10	8	5.880	2.25	3⁄8–16	8	11
3"	11.60	11.98	8.60	1.92	1.20	2.75	3.60	1.19	.625	3/16	–	–	3⁄4–10	8	6.625	2.25	3⁄8–16	12	17
3.5"	11.97	11.97	8.72	2.05	1.30	3.19	3.60	1.19	.625	3/16	–	–	3/4-10	8	7.250	2.25	3/8-16	14	19
4"	12.92	13.54	9.42	2.13	1.25	3.62	3.67	1.19	.625	3/16	–	–	3⁄4–10	8	7.875	2.25	3⁄8–16	17	24
5"	14.53	15.16	10.28	2.25	1.34	4.55	3.81	1.25	.750	1/4	–	–	3/4-10	8	9.250	2.25	3⁄8–16	20	30
6"	15.93	16.31	10.81	2.29	1.38	5.55	3.81	1.25	1.000	3/8	–	–	3⁄4–10	12	10.625	2.25	3⁄8–16	30	49
8"	18.10	19.50	12.22	2.88	1.54	7.06	4.08	1.50	1.250	3/8	–	–	7⁄8–9	12	13.000	3.25	3⁄8–16	52	80
10"	21.60	22.10	14.22	3.25	1.70	9.00	4.84	2.25	1.500	3/8	1–8	2	1–8	16	15.250	3.25	3⁄8–16	88	115
12"	28.40	28.40	17.90	3.62	1.86	10.72	6.90	2.50	1.750	1/2	1-1⁄8–8	4	1-1⁄8–8	16	17.750	4.25	1⁄2–13	153	199
14"	34.31	34.31	19.74	4.62	2.48	12.08	7.36	3.25	2.000	1/2	1-1⁄8–8	4	1-1⁄8–8	20	20.250	4.25	1⁄2–13	285	324
16"	38.14	38.14	21.82	5.25	2.59	13.72	7.82	3.00	2.250	3/4	1-1⁄4–8	4	1-1⁄4–8	20	22.500	5.00	3⁄4–10	336	401
18"	40.26	40.26	23.00	5.88	3.03	15.56	7.87	3.25	2.500	3/4	1-1⁄4–8	4	1-1⁄4–8	24	24.750	5.00	3⁄4–10	393	517
20"	43.62	43.62	25.13	6.31	3.24	17.22	8.74	4.50	3.000	3/4	1-1⁄4–8	4	1-1⁄4–8	24	27.000	5.00	3⁄4–10	510	735
24"	49.94	49.94	28.27	7.19	3.62	20.61	8.89	4.00	3.500	1	1-1⁄2–8	4	1-1⁄2–8	24	32.000	7.00	1–8	733	1020
30"	62.40	62.40	31.90	8.88	4.39	27.25	9.02	5.00	4.500	1	1-3⁄4–8	4	1-3⁄4–8	28	39.250	7.00	1–8	1745	2145

ASME Class 600

VALVE SIZE	WAFER	LUG																WEIGHT (LBS.)	
	A*	A**	B	C	D	E	F	G	H	J	K*	L*	M**	N**	P	R	S	WAFER	LUG
2"	10.59	10.59	7.59	1.75	1.06	1.72	3.34	–	.500	–	–	–	5/8-11	8	5.000	2.25	3⁄8–16	11	13
3"	11.60	12.10	8.60	2.12	1.20	2.50	3.60	1.19	.625	3/16	–	–	3⁄4–10	8	6.625	2.25	3⁄8–16	13	18
4"	14.43	14.93	9.81	2.50	1.40	3.43	3.81	1.25	.750	1/4	–	–	7⁄8–9	8	8.500	2.25	3⁄8–16	30	52
6"	17.27	18.46	11.71	3.06	1.68	5.18	4.09	1.50	1.250	3/8	1-8	2	1–8	12	11.500	3.25	3⁄8–16	42	85
8"	21.35	22.00	13.97	4.00	1.85	6.28	4.84	2.25	1.500	3/8	1-1⁄8–8	–	1-1⁄8–8	12	13.750	3.25	3⁄8–16	72	127
10"	31.15	31.15	17.90	4.62	2.00	7.95	6.90	2.50	1.750	1/2	1-1⁄4–8	4	1-1⁄4–8	16	17.000	4.25	1⁄2–13	170	233
12"	34.80	34.80	20.13	5.50	2.53	9.68	7.50	3.00	2.250	3/4	1-1⁄4–8	4	1-1⁄4–8	20	19.250	5.00	3⁄4–10	245	379
14"	39.21	39.21	22.41	6.13	3.14	10.97	7.88	3.50	2.50	3/4	1-3/8-8	4	1-3/8-8	20	20.75	5.00	3/4-10	400	600
16"	–	44.25	25.38	7.00	3.50	12.60	9.38	5.00	3.000	3/4	–	–	1-1⁄2–8	20	23.750	5.00	3⁄4–10	–	1170

NOTES:

1. General

a. Standard valves tested to MSS SP-61. API 598 testing available on request.
b. Dimensions shown are for reference only. Certified drawings available on application.

2. For 2" through 24" sizes:

a. Face-to-face dimensions (C) meet, within specified tolerance, MSS SP-68 and API 609 requirements.
b. Valves are designed for installation between ASME B16.5 flanges.

3. For 30" through 48" sizes:

a. Valves are designed for installation between ASME B16.47 Class A flanges. (Class B on request)

Unique Valve Seat Design — Metal Seat

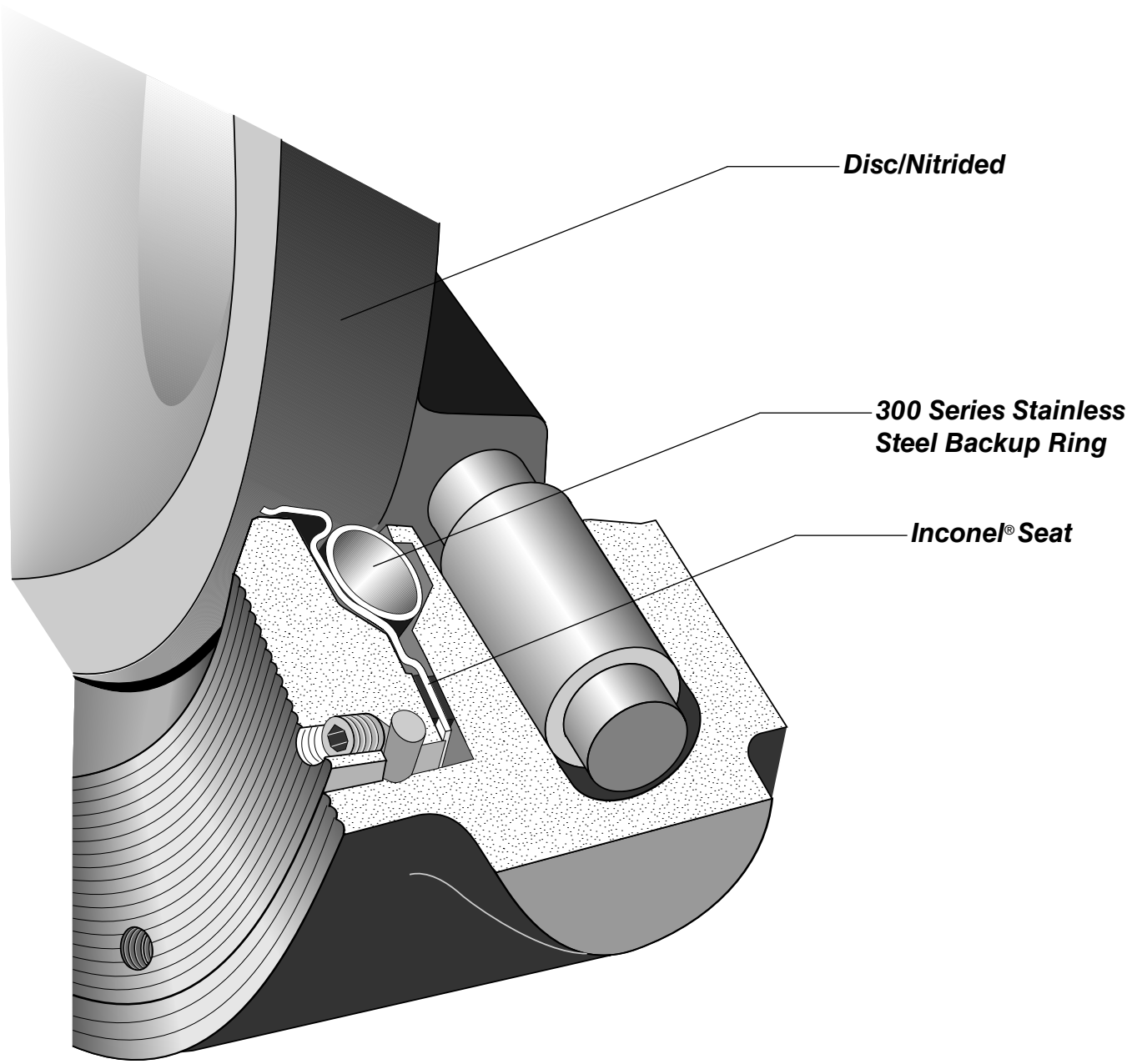

The Flowseal metal-to-metal seat high performance butterfly valve incorporates an Inconel® seat for higher tensile strength, a 300 series stainless steel back-up ring in the seat cavity for axial seat support, and a disc that is case hardened by nitriding.

The Inconel® seat, by its dynamic and flexible design, applies enough force per linear inch against the disc edge (Rockwell Hardness of C66 to C70) to obtain an optimum sealing characteristic while controlling the loads between the metal surfaces.

The Flowseal metal-to-metal seat valve is utilized for temperatures up to 900°F, (482°C) in compliance with ASME B16.34 pressure/temperature specifications. Leakage is rated at Class IV per ASME FCI 70-2.

Principle of Seat Sealing — Metal Seat

PRINCIPLE OF METAL SEATING

Metal-to-metal sealing is accomplished by the "line contact" between a spherical surface and conical surface. Figure 1 illustrates a typical globe control valve seat and plug. The plug seating surface is the segment of a sphere; when engaged against the seat ring, a line contact seal is achieved.

In a metal seat design, it is necessary to apply enough force per linear inch to maintain a tight metal-to-metal contact between the sealing members; however, high linear thrust can cause a collapse of the seating members ("bearing failure").

Figure 1

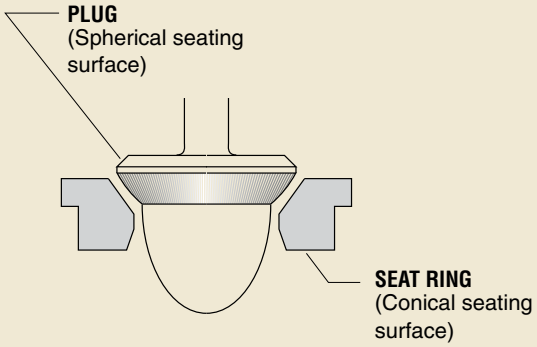

DISC CLOSED, Self-Energized Seal

In Figure 2, the Flowseal disc and seat are engaged, and the process fluid is under low pressure. The spherical edge of the disc, with a larger diameter than the conical seat tongue, imparts a thrust of approximately 600 pounds per linear inch against the seat. The mechanical properties and shape of the Inconel® seat allow it to both flex and maintain a constant thrust against the disc.

This controlled loading prevents the occurrence of bearing failure and reduces the leakage and wear between the components.

Figure 2

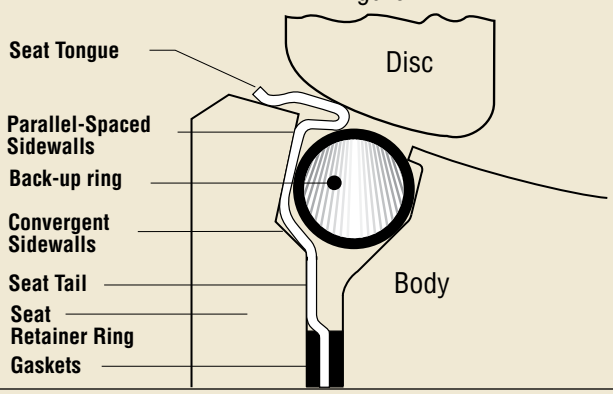

DISC CLOSED, Pressure-Energized Seal (Seat Upstream)

As line pressure increases, the process fluid enters the sidewall area and applies a load against the parallel-spaced sidewall and convergent sidewall of the metal seat. The seat moves towards the downstream sidewall while being supported axially by the support ring, as shown in Figure 3. The cavity shape confines the seat movement and directs the movement radially inward towards the disc; the higher the line pressure, the tighter the line contact between the disc and seat. The Inconel® seat, shaped by a special hydroforming process, is able to flex under these loads and return to its original shape after removal of the loads.

This dynamic seal, patented by Flowseal, is totally unique among high performance butterfly valves.

Figure 3

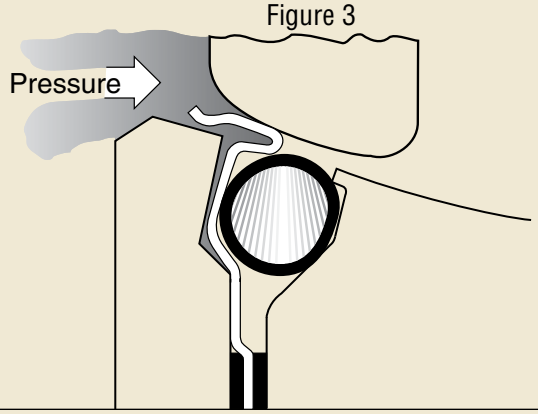

DISC CLOSED, Pressure-Energized Seal (Seat Downstream)

The Flowseal valve is bi-directional (in some instances, modifications may be required to operate this arrangement for dead end service). The cavity and seat sidewalls are symmetrically designed to permit, confine and direct movement of the seat to the disc to dynamically seal with line pressure in the seat downstream direction, as in Figure 4. Recommended installation direction is "SUS" (seat upstream), as in Figure 3.

The stainless steel back-up ring interacts dynamically with the metal seat for axial support in seat sealing. Additionally, this ring effectively restricts corrosion and particulate build-up in the cavity.

Figure 4

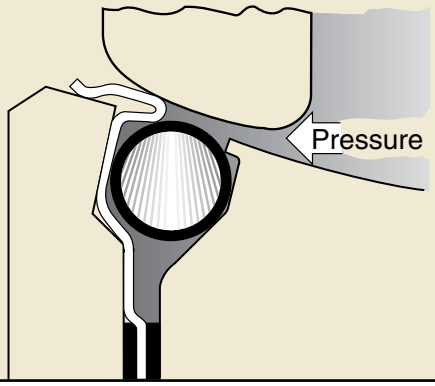

High Performance Butterfly

Valve Components — Metal Seat

KEY
Square key valve-to-operator connection provides an externally controlled failure point upon over-torquing.

GLAND FLANGE
Applies load against packing gland to prevent external leakage. Fully adjustable.

PACKING
Common materials are TFE for up to 450°F (232°C) and Graphite for up to 900°F (482°C).

WEDGE RING
Stainless steel band wedged between valve body and retainer ring by set screws to lock seat and retainer ring in position on valve sizes 2" through 30". Socket head cap screws are used on valve sizes 36" and larger.

WEDGE PINS
Provide positive mechanical attachment of disc to shaft.

OVERTRAVEL STOP
Prevents disc from rotating into wrong quadrant.

SET SCREWS
Cone point screws force wedge ring outward to lock seat retainer in position on valve sizes 2" through 30" Socket head cap screws are used on valve sizes 36" and larger.

METAL SEAT
Patented metal seat with metal back-up ring.

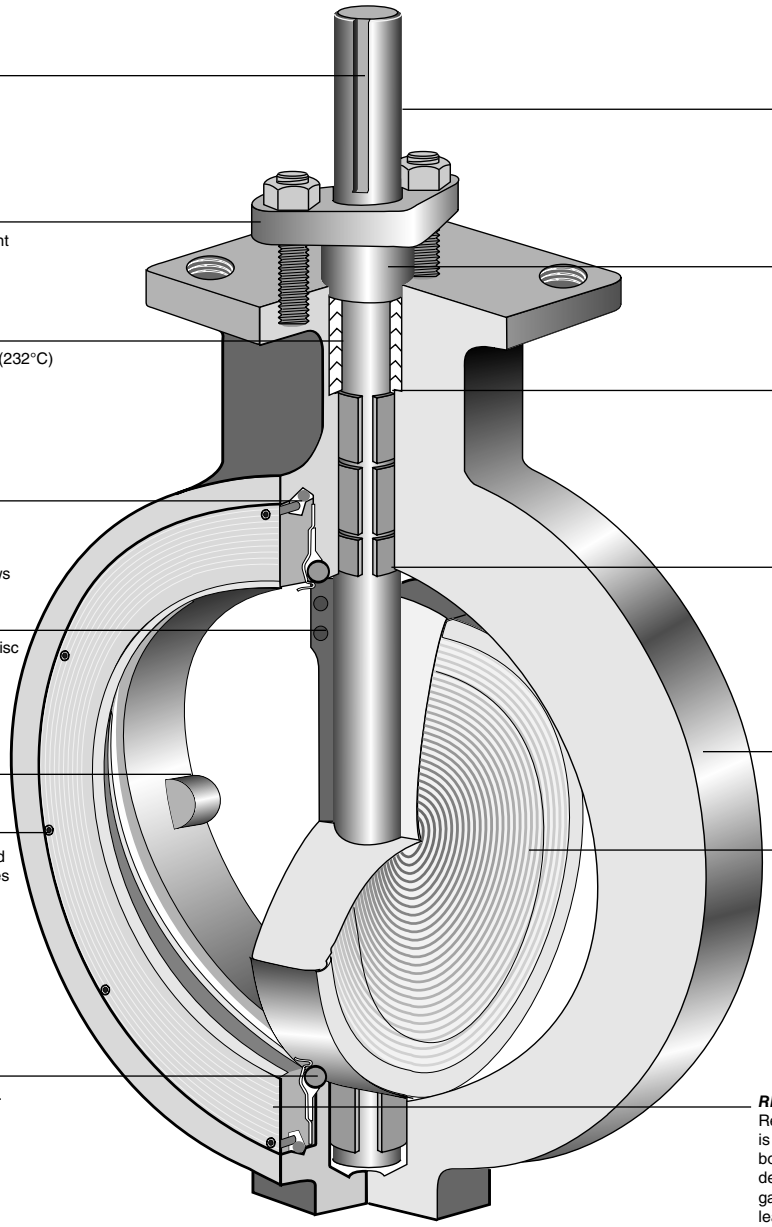

SHAFT
Solid shaft provides alignment and rigid support for disc.

PACKING GLAND
Separate part from gland flange, preventing uneven load distribution against packing.

BEARINGS
Both above and below the disc, bearings maintain shaft alignment.
Common materials include:
- Glass-backed TFE for up to 450°F (232°C). (Not for steam service.)
- Luberized Bronze for up to 750°F (398°C).
- 300 Series Stainless Steel Nitrided for up to 900°F (482°C).

DISC SPACERS
Disc is centered by use of thrust spacers around shaft in sizes 2" to 5". Disc position stops or thrust bolt arrangements are used for larger sizes.

BODY
ASME B16.34 design in either wafer or lug configuration.

DISC
360° uninterrupted spherical edge for sealing. Profile is designed for maximum flow and equal percentage control. Disc seating surface is Nitrided for enhanced temperature and abrasion resistance.

RETAINER RING
Retains seat in valve. Standard surface finish is 125 to 250 AARH and is compatible with both standard gaskets and spiral wound gasket designs. Outside diameter is recessed within gasket sealing surface to prevent external leakage.

End Seal Variation

The ASME 150 14" through 24" sizes feature a two-piece shaft design. The lower shaft utilizes an end seal in the body to prevent external leakage. The component parts include an end seal, an end cap and end cap bolts.

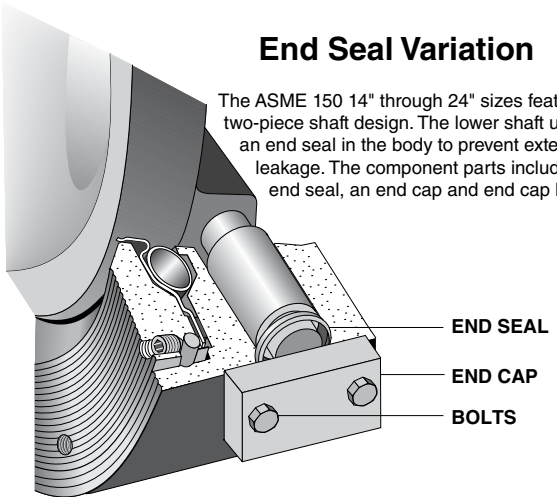

Lower Packing Variation

The ASME 150 30" through 48"; ASME 300 14" through 30"; ASME 600 10" through 16" sizes feature a two-piece shaft design which utilizes a lower packing seal in the valve body to prevent external leakage. The component parts are of the same design used in the packing assembly in the top of the valve body neck.

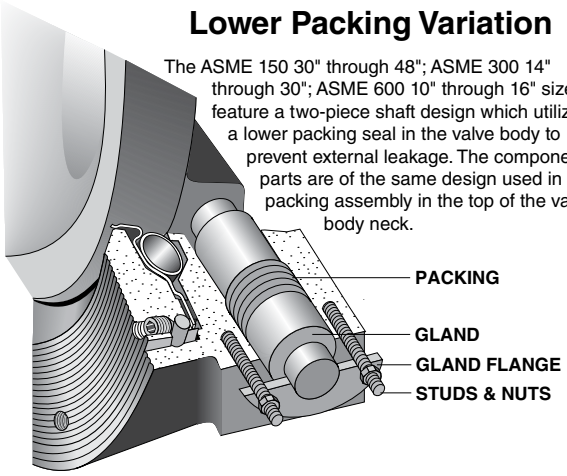

Pressure/Temperature Ratings Metal Seat

PRESSURE/TEMPERATURE RATINGS

As temperature increases, the pressure retaining capability of materials decreases. The graph below illustrates the pressure/temperature ratings of the Flowseal ASME Class 150, Class 300 and Class 600.

The heavy lines define the ratings of the carbon steel and stainless steel valve body (or “shell”) in conformance to ASME B16.34. The shaded areas define the ratings of the metal seat.

Seat ratings are based on differential pressure with the disc in the fully closed position.

ASME B16.34 Body and Flowseal Metal Seat Pressure - Temperature Ratings

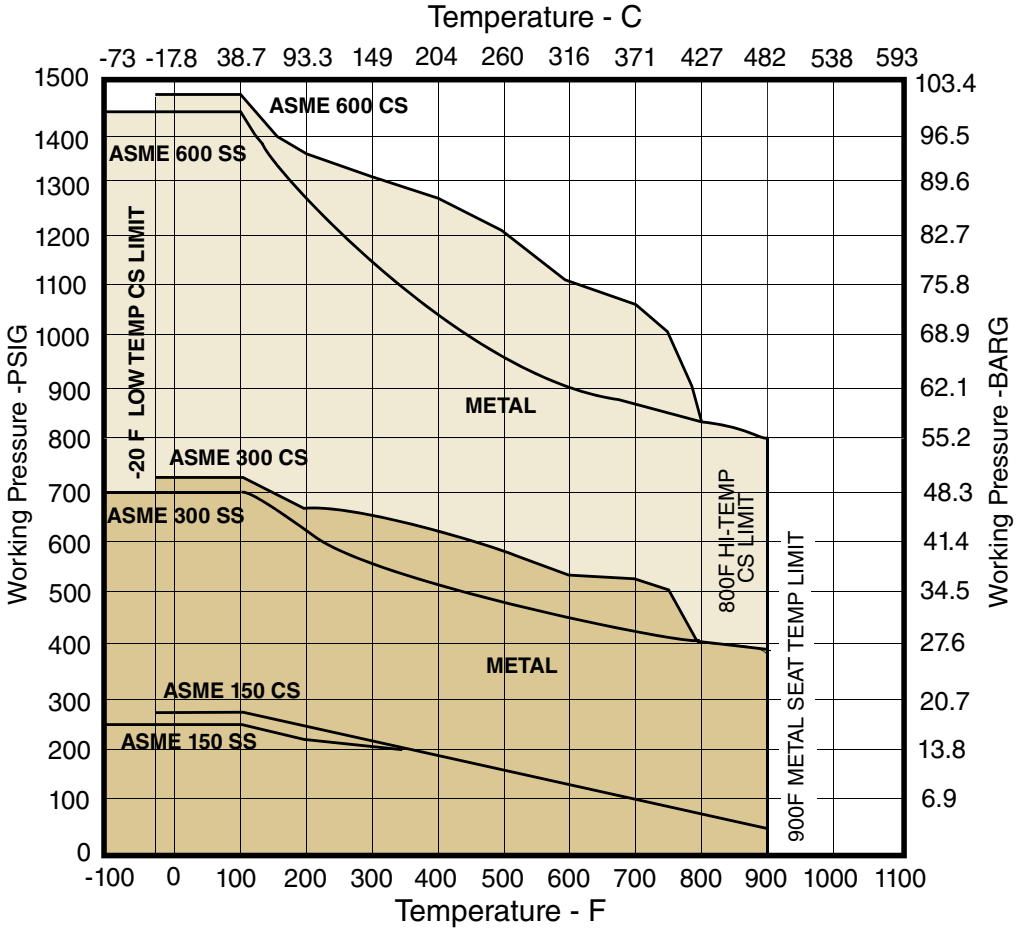

High Performance Butterfly

Dimensions — Metal Seat

NOTE: See page 29 for complete mounting pad dimensional details.

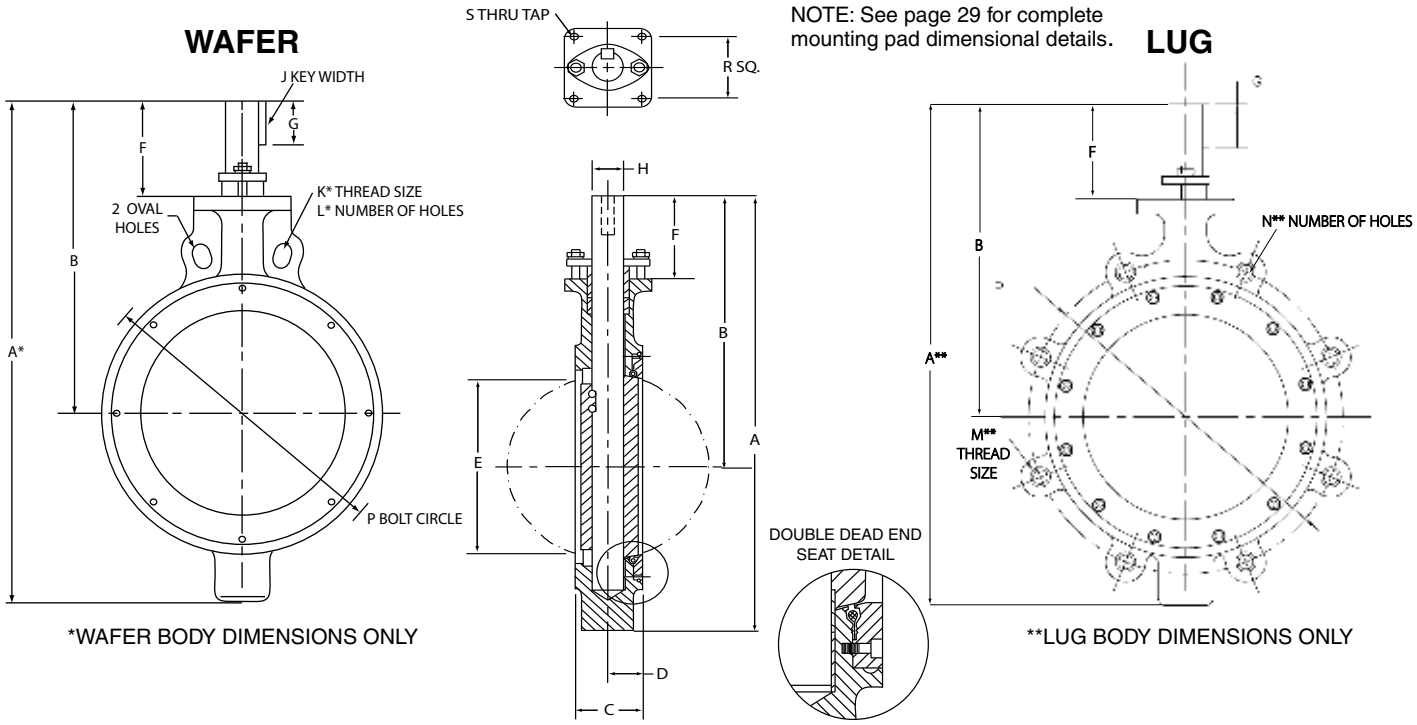

*WAFER BODY DIMENSIONS ONLY

**LUG BODY DIMENSIONS ONLY

ASME Class 150

VALVE SIZE	WAFER	LUG																WEIGHT (LBS.)	
	A*	A**	B	C	D	E	F	G	H	J	K*	L*	M**	N**	P	R	S	WAFER	LUG
2"	10.59	10.59	7.59	1.75	1.06	1.72	3.34	.88	.500	3/16	–	–	5/8–11	4	4.750	2.25	3/8–16	8	11
2.5"	10.30	10.30	7.59	1.88	1.09	2.09	3.34	.88	.500	3/16	–	–	5/8–11	4	5.500	2.25	3/8–16	8	11
3"	11.60	11.98	8.60	1.92	1.20	2.75	3.60	1.19	.625	3/16	–	–	5/8–11	4	6.000	2.25	3/8–16	11	13
3.5"	11.97	11.97	8.72	2.05	1.30	3.19	3.60	1.19	.625	3/16	–	–	5/8–11	8	7.000	2.25	3/8–16	14	17
4"	12.92	13.55	9.42	2.13	1.26	3.62	3.67	1.19	.625	3/16	–	–	5/8–11	8	7.500	2.25	3/8–16	17	25
5"	14.53	15.16	10.28	2.25	1.34	4.55	3.81	1.25	.750	1/4	–	–	3/4–10	8	8.500	2.25	3/8–16	20	30
6"	15.69	15.93	10.81	2.29	1.38	5.55	3.81	1.25	.750	1/4	–	–	3/4–10	8	9.500	2.25	3/8–16	30	35
8"	17.81	17.94	11.93	2.50	1.49	7.28	3.80	1.25	1.000	3/8	–	–	3/4–10	8	11.750	2.25	3/8–16	44	48
10"	19.85	20.85	12.97	2.81	1.70	9.20	4.09	1.50	1.250	3/8	–	2	7/8–9	12	14.250	3.25	3/8–16	71	91
12"	24.96	24.96	15.46	3.23	1.86	11.15	4.83	2.25	1.500	3/8	–	2	7/8–9	12	17.000	3.25	3/8–16	110	127
14"	27.14	27.14	16.07	3.62	2.19	12.76	4.82	2.25	1.500	3/8	–	4	1–8	12	18.750	3.25	3/8–16	135	183
16"	31.66	31.66	19.61	4.00	2.31	14.58	6.92	2.50	1.750	1/2	–	4	1–8	16	21.250	4.25	1/2–13	182	250
18"	34.53	34.53	21.35	4.50	2.45	16.38	7.35	3.25	2.000	1/2	–	4	1-1/8–8	16	22.750	4.25	1/2–13	234	305
20"	36.70	36.70	22.76	5.00	2.94	18.38	7.63	3.00	2.250	3/4	1-1/8–8	4	1-1/8–8	20	25.000	5.00	3/4–10	320	414
24"	41.57	41.57	25.13	6.06	3.12	21.88	7.88	3.25	2.500	3/4	1-1/4–8	4	1-1/4–8	20	29.500	5.00	3/4–10	505	702
30"	52.08	52.08	29.35	6.75	3.53	28.00	8.73	4.50	3.000	3/4	1-1/4–8	4	1-1/4–8	28	36.000	5.00	3/4–10	925	1130
36"	64.75	64.75	32.64	8.38	4.34	33.66	8.14	3.50	3.750	1	1-1/2–8	4	1-1/2–8	32	42.750	7.00	1–8	1630	1890

Dimensions — Metal Seat

ASME Class 300

VALVE SIZE	WAFER	LUG																WEIGHT (LBS.)	
	A*	A**	B	C	D	E	F	G	H	J	K*	L*	M**	N**	P	R	S	WAFER	LUG
2"	10.59	10.59	7.59	1.75	1.06	1.72	3.34	.88	.500	3/16	–	–	5/8-11	8	5.000	2.25	3/8-16	8	11
2.5"	10.30	10.30	7.59	1.88	1.09	2.09	3.34	.88	.500	3/16	–	–	3/4-10	8	5.880	2.25	3/8-16	8	11
3"	11.60	11.98	8.60	1.92	1.20	2.75	3.60	1.19	.625	3/16	–	–	3/4–10	8	6.625	2.25	3/8–16	12	17
3.5"	11.97	11.97	8.72	2.05	1.30	3.19	3.60	1.19	.625	3/16	–	–	3/4-10	8	7.250	2.25	3/8-16	14	19
4"	12.92	13.54	9.42	2.13	1.25	3.62	3.67	1.19	.625	3/16	–	–	3/4–10	8	7.875	2.25	3/8–16	17	24
5"	14.53	15.16	10.28	2.25	1.34	4.55	3.81	1.25	.750	1/4	–	–	3/4-10	8	9.250	2.25	3/8-16	20	30
6"	15.93	16.31	10.81	2.29	1.38	5.55	3.81	1.25	1.000	3/8	–	–	3/4–10	12	10.625	2.25	3/8–16	30	49
8"	18.10	19.50	12.22	2.88	1.54	7.06	4.08	1.50	1.250	3/8	–	–	7/8–9	12	13.000	3.25	3/8–16	52	80
10"	21.60	22.10	14.22	3.25	1.70	9.00	4.84	2.25	1.500	3/8	1–8	2	1–8	16	15.250	3.25	3/8–16	88	115
12"	28.40	28.40	17.90	3.62	1.86	10.72	6.90	2.50	1.750	1/2	1-1/8–8	4	1-1/8–8	16	17.750	4.25	1/2–13	153	199
14"	34.31	34.31	19.74	4.62	2.48	12.08	7.36	3.25	2.000	1/2	1-1/8–8	4	1-1/8–8	20	20.250	4.25	1/2–13	285	324
16"	38.14	38.14	21.82	5.25	2.59	13.72	7.82	3.00	2.250	3/4	1-1/4–8	4	1-1/4–8	20	22.500	5.00	3/4–10	336	401
18"	40.26	40.26	23.00	5.88	3.03	15.56	7.87	3.25	2.500	3/4	1-1/4–8	4	1-1/4–8	24	24.750	5.00	3/4–10	393	517
20"	43.62	43.62	25.13	6.31	3.24	17.22	8.74	4.50	3.000	3/4	1-1/4–8	4	1-1/4–8	24	27.000	5.00	3/4–10	510	735
24"	49.94	49.94	28.27	7.19	3.62	20.61	8.89	4.00	3.500	1	1-1/2–8	4	1-1/2–8	24	32.000	7.00	1–8	733	1020
30"	62.40	62.40	31.90	8.88	4.39	27.25	9.02	5.00	4.500	1	1-3/4–8	4	1-3/4–8	28	39.250	7.00	1–8	1745	2145

ASME Class 600

Contact Factory for availability and dimensions.

NOTES:

1. General

a. Standard valves tested to MSS SP-61 and ASME/FCI 70-2, Class IV.
b. Dimensions shown are for reference only. Certified drawings available on application.

2. For 2" through 24" sizes:

a. Face-to-face dimensions (C) meet, within specified tolerance, MSS SP-68 and API 609 requirements.
b. Valves are designed for installation between ASME B16.5 flanges.

3. For 30" through 48" sizes:

a. Valves are designed for installation between MSS SP-44 flanges.

Materials and Specifications — Metal Seat

STANDARD MATERIALS OF CONSTRUCTION

Carbon Steel Construction

COMPONENTS	–20°F to 500°F (-28°C to 260°C) *171MTG CONSTRUCTION*	501°F to 750°F (261°C to 398°C) *171MGB CONSTRUCTION*	751°F to 800°F (399°C to 426°C) *172MGS CONSTRUCTION*
BODY	Carbon Steel A216 Gr WCB, or A105	Carbon Steel A216 Gr WCB, or A105	Carbon Steel A216 Gr WCB, or A105
DISC	316 Stainless Steel A351 CF8M, or A182 F316 Nitrided	316 Stainless Steel A351 CF8M, or A182 F316 Nitrided	316 Stainless Steel A351 CF8M, or A182 F316 Nitrided
SHAFT & PINS	17-4 PH Stainless Steel A564 Gr 630	17-4 PH Stainless Steel A564 Gr 630	316 Stainless Steel* A479 Gr 316
SEAT	Inconel®	Inconel®	Inconel®
PACKING	PTFE	Graphite	Graphite
BEARINGS	Glass-Backed PTFE	Bronze	316 Stainless Steel Nitrided

Stainless Steel Construction

COMPONENTS	–100°F to 500°F (-73°C to 260°C) *271MTG CONSTRUCTION*	501°F to 750°F (261°C to 398°C) *271MGB CONSTRUCTION*	751°F to 900°F (399°C to 482°C) *272MGS CONSTRUCTION*
BODY	316 Stainless Steel A351 CF8M, or A182 F316	316 Stainless Steel A351 CF8M, or A182 F316	316 Stainless Steel A351 CF8M, or A182 F316
DISC	316 Stainless Steel A351 CF8M, or A182 F316 Nitrided	316 Stainless Steel A351 CF8M, or A182 F316 Nitrided	316 Stainless Steel A351 CF8M, or A182 F316 Nitrided
SHAFT & PINS	17-4 PH Stainless Steel A564 Gr 630	17-4 PH Stainless Steel A564 Gr 630	316 Stainless Steel* A479 Gr 316
SEAT	Inconel®	Inconel®	Inconel®
PACKING	PTFE	Graphite	Graphite
BEARINGS	Glass-Backed PTFE	Bronze	316 Stainless Steel Nitrided

* Shaft materials other than 17-4 PH or Monel® will affect working pressure ratings. Please consult factory.

Unique Valve Seat Design — Fire Flow

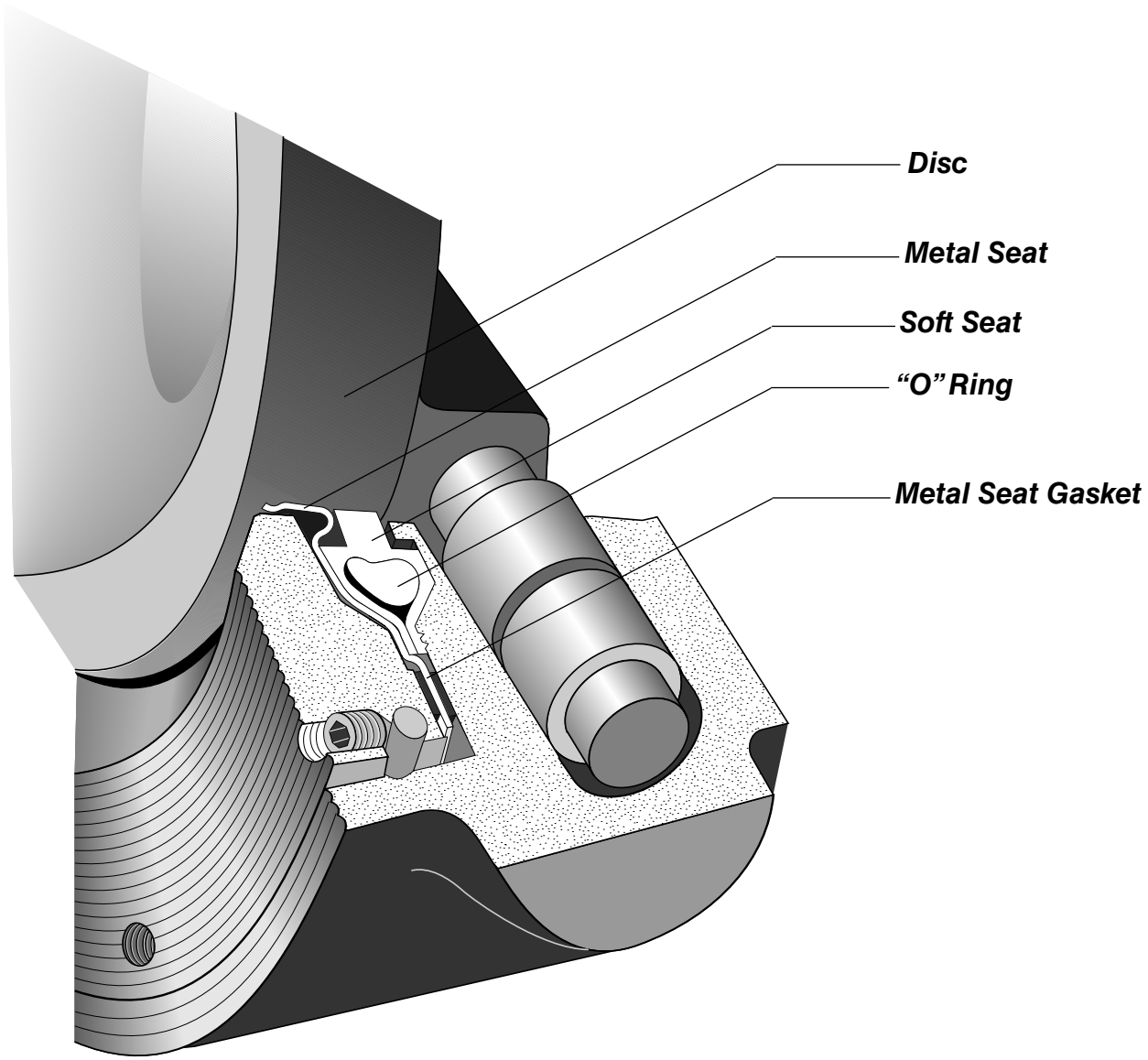

The Flowseal Fire-Flow™ high performance butterfly valve (HPBFV) is a fire-safe, soft seat quarter-turn valve. The Fire-Flow™ design incorporates two patented seats which function together to seal off pipeline flow. In normal operation, the soft seat provides a bi-directional "bubble tight" shutoff (zero leakage); the metal seat provides bi-directional shutoff in the event of a fire, in conformance to industry fire-safe requirements.

With little or no pressure, the Fire-Flow seat creates a self-energized seal against the disc. Higher line pressures act on the geometry of both seats to dynamically load them against the disc, creating higher sealing forces in either direction.

The Fire-Flow™ metal seat is made of Inconel® material which is shaped by a proprietary hydroforming process into its unique, patented design. Stainless steel outer bearings are included for post-fire disc and shaft alignment. Fireproof packing is used to prevent external shaft leakage.

Principle of Seat Sealing — Fire Flow

DISC OPEN, Normal Operation

In Figure 1, the disc and seat assembly are not engaged. In this position, the metal seat acts to keep the soft seat inside the seat cavity while the soft seat shoulders seal the cavity from exposure to the process fluid. (The o-ring is under tension and imparts a load against the soft seat.)

The soft seat is protected from abrasion and wear because it is recessed inside the seat cavity area. The o-ring is isolated from exposure to the fluid because it is completely encapsulated by the seat tails which act as a (soft) gasket in the anchoring groove area. The metal seat gaskets add further high temperature protection past the anchoring grooves.

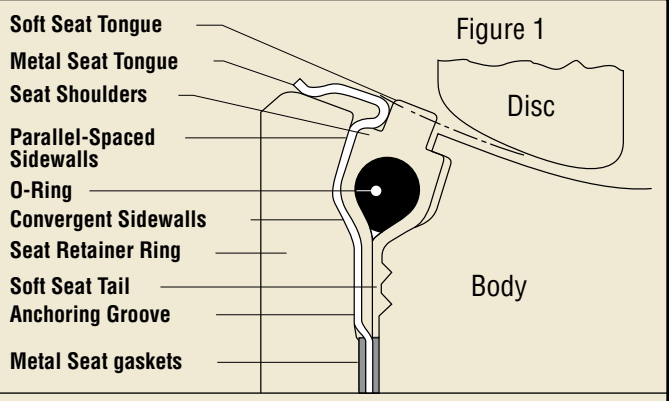

Figure 1

DISC CLOSED, Normal Operation

In Figure 2, the disc and seat assembly are engaged; both the metal seat and the soft seat are in contact with the disc. Under little to no pressure conditions, both seats are self-energized. The disc edge, with a larger diameter than the seat tongues, moves the seats radially outward; the metal seat shape, with a mechanical and dynamic flexibility, is designed to be hoop-loaded and impart a spring force against the disc, while the soft seat o-ring is stretched and flattened (without deformation of the material) and imparts a mechanical pre-load against the disc.

With increased line pressure, the process fluid enters the cavity sidewall area and applies loads against the seat sidewalls. The cavity design allows the seats to move toward the downstream sidewalls, but confines and directs the movement radially inward towards the disc; the higher the pressure the tighter the seal. The symmetrical shape and angle of the cavity permit the seal to be bi-directional.

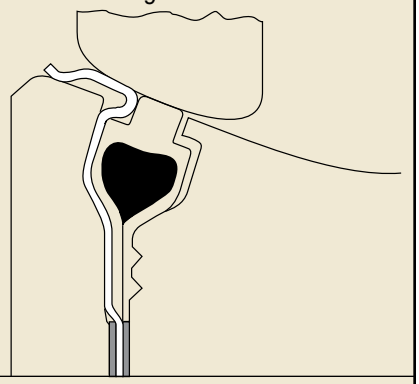
Figure 2

DISC CLOSED, After Fire (Seat Upstream)

After a fire, with partial or complete destruction of the soft seat, the metal seat maintains metal-to-metal contact with the disc and restricts leakage of the process fluid in conformance to industry fire-safe requirements.

With little or no line pressure, the spring force and hoop load of the metal seat maintain a “line contact” seal against the disc edge. Under higher pressures, the process fluid enters the cavity sidewall areas and applies loads against the seat sidewalls (Figure 3). The geometry of the metal seat permits the seat to move axially, but directs the movement radially inward toward the disc. The higher the pressure, the tighter the line contact seal.

Graphite gaskets, on both sides of the metal seat tail, seal the anchoring groove and prevent leakage of the process fluid.

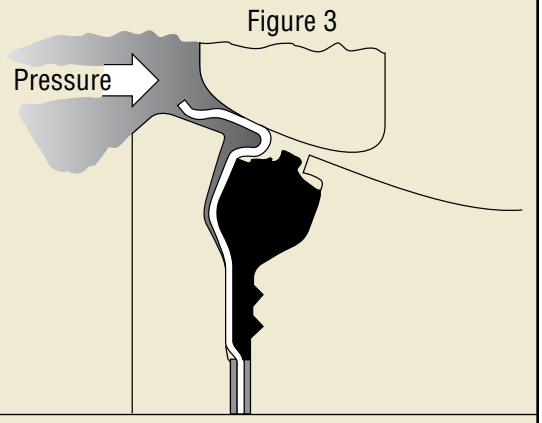

Figure 3

DISC CLOSED, After Fire (Seat Downstream)

The Flowseal Fire-Flow™ valve is bi-directional; however, modifications are required to operate for bi-directional dead end service. The angle and shape of the cavity and metal seat maintains metal-to-metal contact in the event of partial or complete soft seat destruction with line pressure in the reverse direction (Figure 4).

While the preferred flow direction is “seat upstream” (SUS), the bi-directional seat design is both self-energized and pressure-energized if the flow direction is “seat downstream” (SDS).

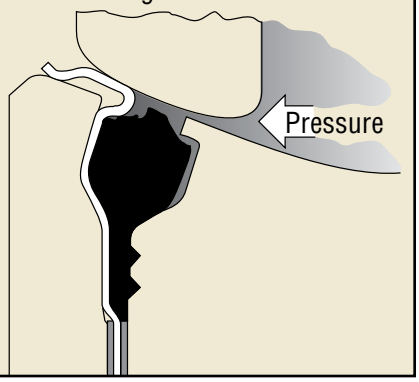

Figure 4

Valve Components — Fire Flow

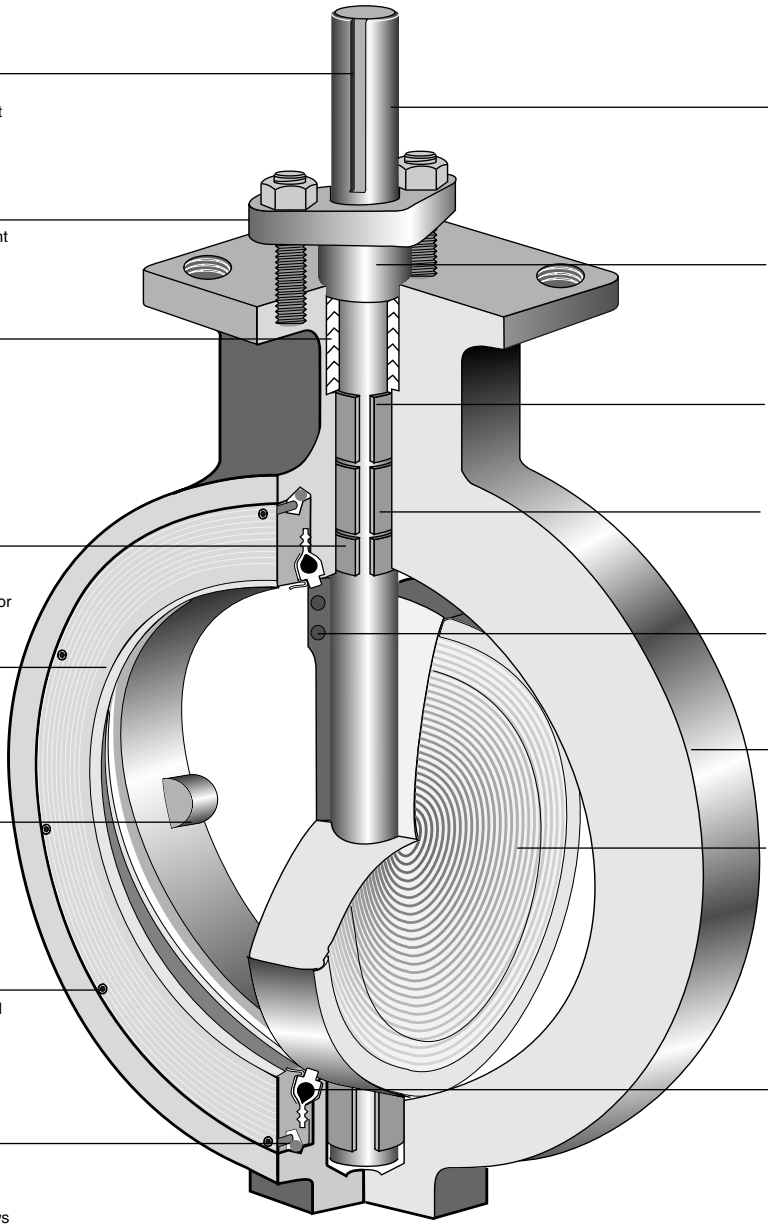

KEY
Square key valve-to-operator connection provides an externally controlled failure point upon over-torquing.

GLAND FLANGE
Applies load against packing gland to prevent external leakage. Fully adjustable.

PACKING
Common material is graphite.

DISC SPACERS
Disc is centered by use of thrust spacers around shaft in sizes 2" to 5". Disc position stops or thrust bolt arrangements are used for larger valve sizes.

RETAINER RING
Retains seat in valve. Standard surface finish is 125 to 200 AARH and is compatible with both standard gaskets and spiral wound gasket designs. Outside diameter is recessed within gasket sealing surface to prevent external leakage.

OVERTRAVEL STOP
Prevents disc from rotating into wrong quadrant.

SET SCREWS
Cone point screws force wedge ring outward to lock seat retainer in position on valve sizes 2" through 30" wafer. Socket head cap screws are used on valve sizes 36" and larger and all DDES lug valves.

WEDGE RING
Stainless steel band wedged between valve body and retainer ring by set screws to lock seat and retainer ring in position on valve sizes 2" through 30". Socket head cap screws are used on valve sizes 36" and larger.

SHAFT
Solid shaft provides alignment and rigid support for disc.

PACKING GLAND
Separate part from gland flange, preventing uneven load distribution against packing.

OUTER BEARINGS
Stainless steel back-up bearings maintain shaft alignment after a fire. (Both above and below disc.)

INNER BEARINGS
Both above and below the disc, bearings are of composite design: TFE bonded to epoxy-glass filament wound ring. Used to align shaft, with high load capacity, low wear and low friction coefficient.

WEDGE PINS
Provide positive mechanical attachment of disc to shaft.

BODY
ASME B16.34 design in either wafer or lug configuration.

DISC
Fire-Flow disc is electroless nickel plated for enhanced temperature and abrasion resistance.

FIRE–FLOW SEAT
Patented bi-directional soft seat design for zero-leakage in normal operation and a metal-to-metal seal after fire, meeting or exceeding industry "fire-safe" specifications.

End Seal Variation

The ASME 150 14" through 24" sizes feature a two-piece shaft design. The lower shaft utilizes an end seal in the body to prevent external leakage. The component parts include an end seal, an end cap and end cap bolts.

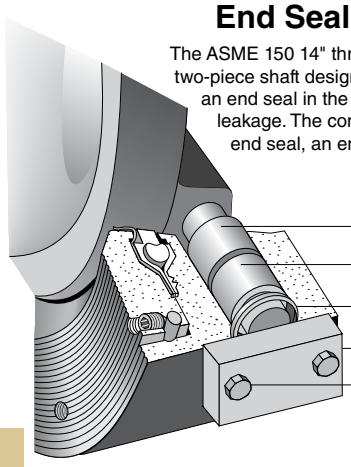

Lower Packing Variation

The ASME 150 30" through 48"; ASME 300 14" through 30"; ASME 600 10" through 16" sizes feature a two-piece shaft design which utilizes a lower packing seal in the valve body to prevent external leakage. The component parts are of the same design used in the packing assembly in the top of the valve body neck.

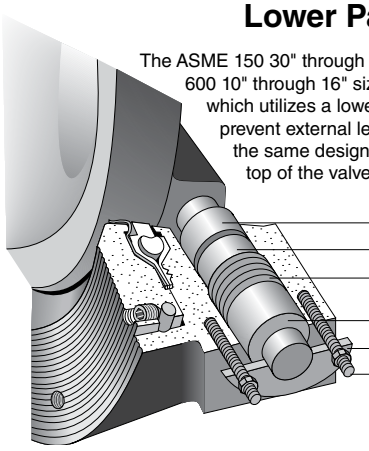

Pressure/Temperature Ratings — Fire Flow

PRESSURE/TEMPERATURE RATINGS

As temperature increases, the pressure retaining capability of materials decreases. The graph below illustrates the pressure/temperature ratings of the Flowseal ASME Class 150, Class 300 and Class 600.

The heavy lines define the ratings of the carbon steel and stainless steel valve body (or "shell") in conformance to ASME B16.34. The shaded areas define the ratings of the soft seat.

Seat ratings are based on differential pressure with the disc in the fully closed position.

ASME B16.34 Body and Flowseal Soft Seat Pressure - Temperature Ratings

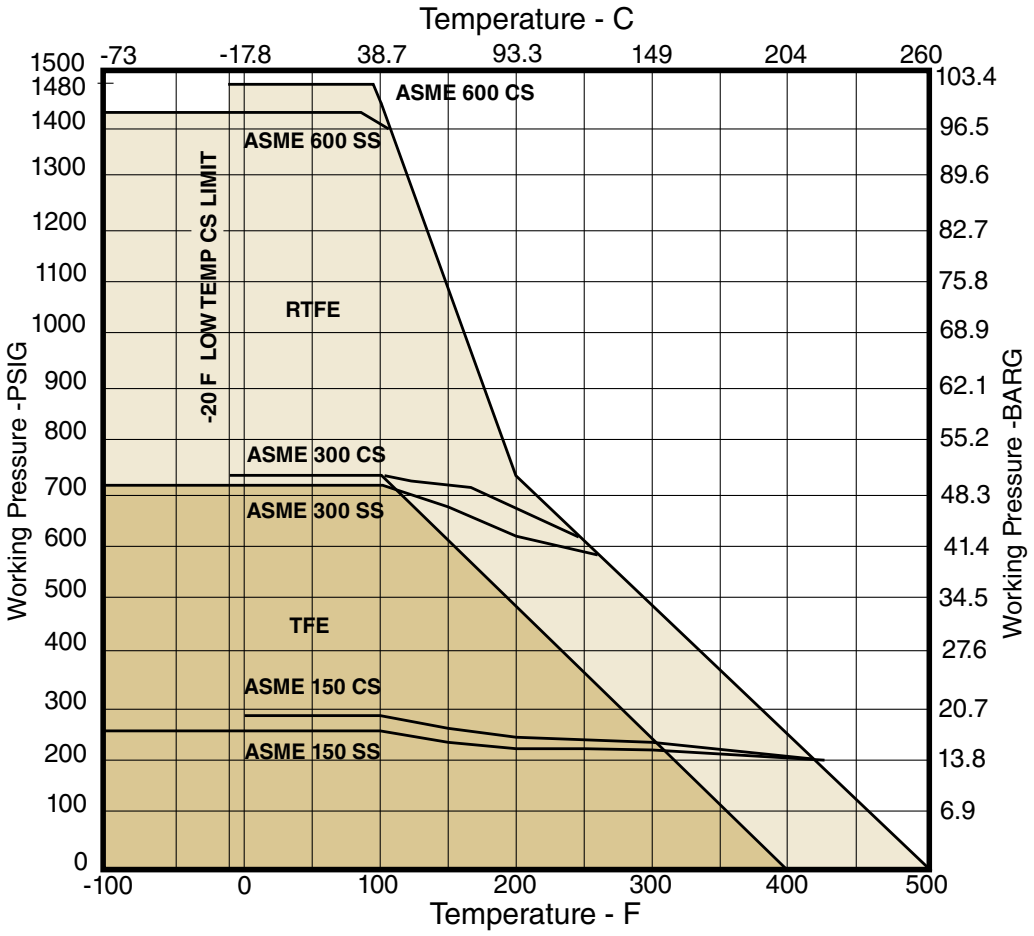

Dimensions — Fire Flow

NOTE: See page 29 for complete mounting pad dimensional details.

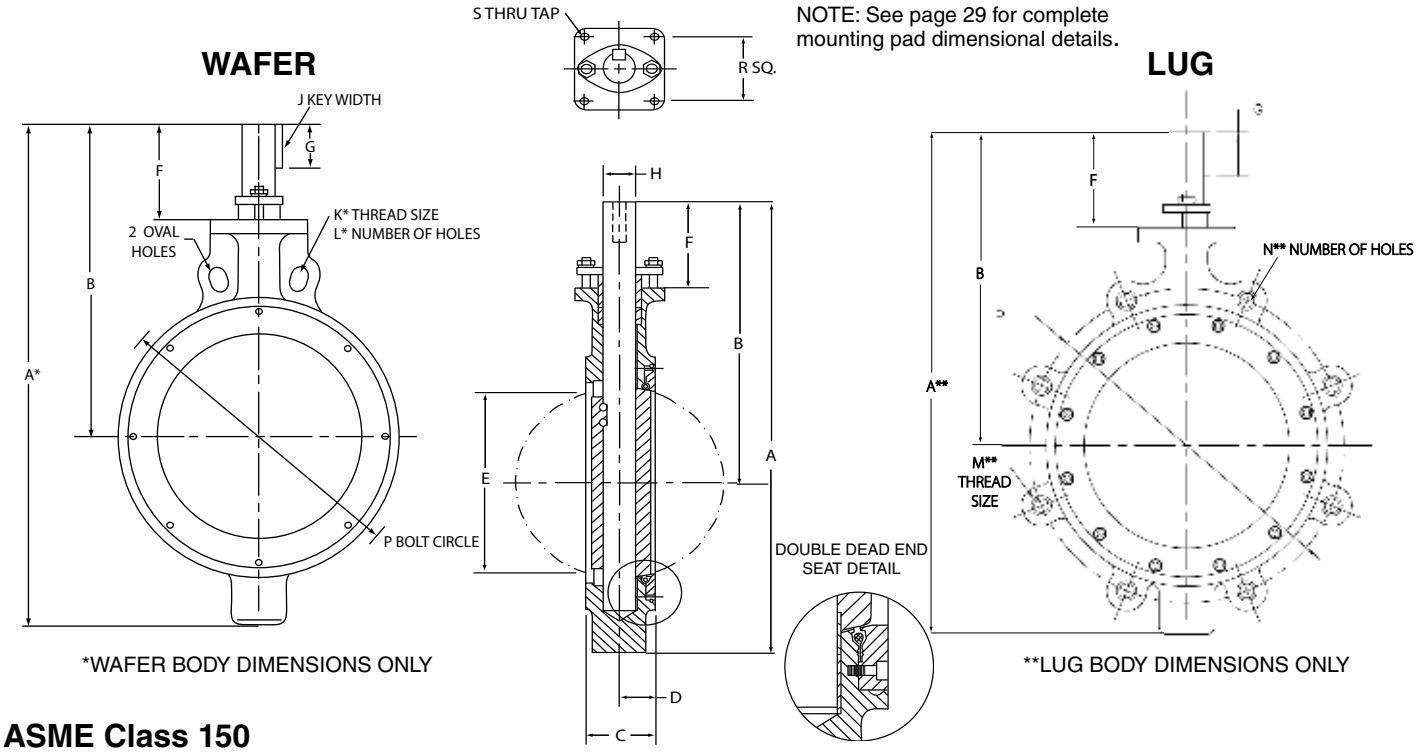

ASME Class 150

VALVE SIZE	WAFER A*	LUG A**	B	C	D	E	F	G	H	J	K*	L*	M**	N**	P	R	S	WEIGHT (LBS.) WAFER	WEIGHT (LBS.) LUG
2"	10.59	10.59	7.59	1.75	1.06	1.72	3.34	.88	.500	3/16	–	–	5/8–11	4	4.750	2.25	3/8–16	8	11
2.5"	10.30	10.30	7.59	1.88	1.09	2.09	3.34	.88	.500	3/16	–	–	5/8–11	4	5.500	2.25	3/8–16	8	11
3"	11.60	11.98	8.60	1.92	1.20	2.75	3.60	1.19	.625	3/16	–	–	5/8–11	4	6.000	2.25	3/8–16	11	13
3.5"	11.97	11.97	8.72	2.05	1.30	3.19	3.60	1.19	.625	3/16	–	–	5/8–11	8	7.000	2.25	3/8–16	14	17
4"	12.92	13.55	9.42	2.13	1.26	3.62	3.67	1.19	.625	3/16	–	–	5/8–11	8	7.500	2.25	3/8–16	17	25
5"	14.53	15.16	10.28	2.25	1.34	4.55	3.81	1.25	.750	1/4	–	–	3/4–10	8	8.500	2.25	3/8–16	20	30
6"	15.69	15.93	10.81	2.29	1.38	5.55	3.81	1.25	.750	1/4	–	–	3/4–10	8	9.500	2.25	3/8–16	30	35
8"	17.81	17.94	11.93	2.50	1.49	7.28	3.80	1.25	1.000	3/8	–	–	3/4–10	8	11.750	2.25	3/8–16	44	48
10"	19.85	20.85	12.97	2.81	1.70	9.20	4.09	1.50	1.250	3/8	–	2	7/8–9	12	14.250	3.25	3/8–16	71	91
12"	24.96	24.96	15.46	3.23	1.86	11.15	4.83	2.25	1.500	3/8	–	2	7/8–9	12	17.000	3.25	3/8–16	110	127
14"	27.14	27.14	16.07	3.62	2.19	12.76	4.82	2.25	1.500	3/8	–	4	1–8	12	18.750	3.25	3/8–16	135	183
16"	31.66	31.66	19.61	4.00	2.31	14.58	6.92	2.50	1.750	1/2	–	4	1–8	16	21.250	4.25	1/2–13	182	250
18"	34.53	34.53	21.35	4.50	2.45	16.38	7.35	3.25	2.000	1/2	–	4	1-1/8–8	16	22.750	4.25	1/2–13	234	305
20"	36.70	36.70	22.76	5.00	2.94	18.38	7.63	3.00	2.250	3/4	1-1/8–8	4	1-1/8–8	20	25.000	5.00	3/4–10	320	414
24"	41.57	41.57	25.13	6.06	3.12	21.88	7.88	3.25	2.500	3/4		4	1-1/4–8	20	29.500	5.00	3/4–10	505	702
30"	52.08	52.08	29.35	6.75	3.53	28.00	8.73	4.50	3.000	3/4	1-1/4–8	4	1-1/4–8	28	36.000	5.00	3/4–10	925	1130
36"	64.75	64.75	32.64	8.38	4.34	33.66	8.14	3.50	3.750	1	1-1/2–8	4	1-1/2–8	32	42.750	7.00	1–8	1630	1890
42"	73.24	73.24	37.62	9.25	5.03	40.31	9.62	5.00	4.500	1	1-1/2–8	4	1-1/2–8	36	49.500	7.00	1–8	2475	2700

Dimensions Fire Flow

ASME Class 300

VALVE SIZE	WAFER A*	LUG A**	B	C	D	E	F	G	H	J	K*	L*	M**	N**	P	R	S	WEIGHT (LBS.) WAFER	WEIGHT (LBS.) LUG
2"	10.59	10.59	7.59	1.75	1.06	1.72	3.34	.88	.500	3/16	–	–	5/8–11	8	5.000	2.25	3/8–16	8	11
2.5"	10.30	10.30	7.59	1.88	1.09	2.09	3.34	.88	.500	3/16	–	–	3/4–10	8	5.880	2.25	3/8–16	8	11
3"	11.60	11.98	8.60	1.92	1.20	2.75	3.60	1.19	.625	3/16	–	–	3/4–10	8	6.625	2.25	3/8–16	12	17
3.5"	11.97	11.97	8.72	2.05	1.30	3.19	3.60	1.19	.625	3/16	–	–	3/4-10	8	7.250	2.25	3/8-16	14	19
4"	12.92	13.54	9.42	2.13	1.25	3.62	3.67	1.19	.625	3/16	–	–	3/4–10	8	7.875	2.25	3/8–16	17	24
5"	14.53	15.16	10.28	2.25	1.34	4.55	3.81	1.25	.750	1/4	–	–	3/4–10	8	9.250	2.25	3/8–16	20	30
6"	15.93	16.31	10.81	2.29	1.38	5.55	3.81	1.25	1.000	3/8	–	–	3/4–10	12	10.625	2.25	3/8–16	30	49
8"	18.10	19.50	12.22	2.88	1.54	7.06	4.08	1.50	1.250	3/8	–	–	7/8–9	12	13.000	3.25	3/8–16	52	80
10"	21.60	22.10	14.22	3.25	1.70	9.00	4.84	2.25	1.500	3/8	1–8	2	1–8	16	15.250	3.25	3/8–16	88	115
12"	28.40	28.40	17.90	3.62	1.86	10.72	6.90	2.50	1.750	1/2	1-1/8–8	4	1-1/8–8	16	17.750	4.25	1/2–13	153	199
14"	34.31	34.31	19.74	4.62	2.48	12.08	7.36	3.25	2.000	1/2	1-1/8–8	4	1-1/8–8	20	20.250	4.25	1/2–13	285	324
16"	38.14	38.14	21.82	5.25	2.59	13.72	7.82	3.00	2.250	3/4	1-1/4–8	4	1-1/4–8	20	22.500	5.00	3/4–10	336	401
18"	40.26	40.26	23.00	5.88	3.03	15.56	7.87	3.25	2.500	3/4	1-1/4–8	4	1-1/4–8	24	24.750	5.00	3/4–10	393	517
20"	43.62	43.62	25.13	6.31	3.24	17.22	8.74	4.50	3.000	3/4	1-1/4–8	4	1-1/4–8	24	27.000	5.00	3/4–10	510	735
24"	49.94	49.94	28.27	7.19	3.62	20.61	8.89	4.00	3.500	1	1-1/2–8	4	1-1/2–8	24	32.000	7.00	1–8	733	1020
30"	62.40	62.40	31.90	8.88	4.39	27.25	9.02	5.00	4.500	1	1-3/4–8	4	1-3/4–8	28	39.250	7.00	1–8	1745	2145

ASME Class 600

VALVE SIZE	WAFER A*	LUG A**	B	C	D	E	F	G	H	J	K*	L*	M**	N**	P	R	S	WEIGHT (LBS.) WAFER	WEIGHT (LBS.) LUG
2"	10.59	10.59	7.59	1.75	1.06	1.72	3.34	–	.500	–	–	–	5/8–11	8	5.000	2.25	3/8–16	11	13
3"	11.60	12.10	8.60	2.12	1.20	2.50	3.60	1.19	.625	3/16	–	–	3/4–10	8	6.625	2.25	3/8–16	13	18
4"	14.43	14.93	9.81	2.50	1.40	3.43	3.81	1.25	.750	1/4	–	–	7/8–9	8	8.500	2.25	3/8–16	30	52
6"	17.27	18.46	11.71	3.06	1.68	5.18	4.09	1.50	1.250	3/8	1–8	2	1–8	12	11.500	3.25	3/8–16	42	85
8"	21.35	22.00	13.97	4.00	1.85	6.28	4.84	2.25	1.500	3/8	1-1/8–8	–	1-1/8–8	12	13.750	3.25	3/8–16	72	127
10"	31.15	31.15	17.90	4.62	2.00	7.95	6.90	2.50	1.750	1/2	1-1/4–8	4	1-1/4–8	16	17.000	4.25	1/2–13	170	233
12"	34.80	34.80	20.13	5.50	2.53	9.68	7.50	3.00	2.250	3/4	1-1/4–8	4	1-1/4–8	20	19.250	5.00	3/4–10	245	379

NOTES:

1. General

a. Standard valves tested to MSS SP-61. API 598 testing available on request.
b. Dimensions shown are for reference only. Certified drawings available on application.

2. For 2" through 24" sizes:

a. Face-to-face dimensions (C) meet, within specified tolerance, MSS SP-68 and API 609 requirements.
b. Valves are designed for installation between ASME B16.5 flanges.

3. For 30" through 48" sizes:

a. Valves are designed for installation between MSS SP-44 and ASME B16.47 flanges.

Valve Flow Coefficients

C_V FACTORS

C_V (Coefficient of Volume) is the number of U.S. gallons per minute of water required to pass through a valve with a pressure drop of 1 psi. The chart below records this C_V factor for the Flowseal valve classes and sizes at ten degree increments between open and closed. The values shown are for the valve installed in the seat upstream ("SUS") position.

Degree Open % Full Cv	10° 1.5%	20° 6%	30° 14%	40° 25.2%	50° 38%	60° 55%	70° 75%	80° 97%	90° 100%
2" 150	1.5	6	14	25	39	56	76	99	102
300	1.4	6	13	24	36	52	71	95	100
600	1.4	5	13	23	35	51	70	90	93
2-1/2" 150	2.2	9	21	37	56	80	110	142	146
300	2.1	8	19	34	52	75	102	136	143
600	-	-	-	-	-	-	-	-	-
3" 150	3.4	14	32	57	87	125	171	221	228
300	3.2	13	30	53	81	117	159	212	223
600	3.1	12	29	52	79	114	156	202	208
3-1/2" 150	5.3	21	49	88	132	192	261	338	349
300	4.8	19	45	80	121	176	240	320	336
4" 150	6.8	27	63	114	171	248	338	437	451
300	6.2	25	58	104	157	228	310	414	435
600	5.8	23	54	98	147	213	290	375	387
5" 150	10.8	43	100	180	271	392	535	692	714
300	9.8	40	92	165	248	361	491	655	688
6" 150	16.5	66	154	278	419	607	827	1070	1103
300	14.9	60	139	250	377	546	744	992	1041
600	14.7	59	137	247	372	538	734	950	979
8" 150	30.9	124	289	520	784	1135	1584	2002	2064
300	27.3	109	255	459	692	1001	1365	1820	1911
600	26.8	107	250	451	679	983	1341	1734	1788
10" 150	52.8	211	492	886	1336	1934	2638	3411	3517
300	45.6	183	426	767	1156	1673	2282	3042	3194
600	41.2	165	384	692	1044	1511	2060	2665	2747
12" 150	72.6	290	677	1219	1838	2660	3628	4690	4837
300	63.3	253	590	1063	1602	2319	3163	4217	4428
600	58.4	233	545	981	1479	2140	2918	3774	3891
14" 150	90	392	914	1646	2481	3592	4898	6530	6857
300	81	326	760	1368	2063	2986	4072	5430	5702
600	73	292	682	1228	1838	2680	3655	4727	4873
16" 150	132	531	1230	2229	3361	4865	6634	8845	9287
300	109	435	1015	1827	2755	3988	5438	7850	8243
600	96	385	899	1619	2423	3533	4818	6231	6424
18" 150	171	684	1596	3873	4332	6270	8550	11270	11400
300	139	555	1295	2331	3515	5088	6938	9250	9712
20" 150	207	828	1932	3478	5244	7590	10350	13800	14420
300	158	630	1470	2646	3990	5775	7875	10150	10658
24" 150	315	1260	2940	5292	7890	11550	15750	21000	22050
300	242	966	2254	4057	6118	8855	12075	16100	16205
30" 150	491	1965	4585	8253	12445	18012	24563	32750	34388
300	404	1614	3766	6779	10222	14795	20175	26900	28245
36" 150	707	2830	6602	11884	17920	25938	35370	45745	47160
42" 150	963	3851	8987	16176	24392	35304	48143	62264	64190
48" 150	1258	5030	11738	21128	31859	46111	62881	81324	83840

C_f FACTORS

The critical flow factor, C_f, expresses the valve pressure recovery ratio. It is equivalent to F_L in ISA nomenclature.

DISC DEGREE OPENING	15°	20°	25°	30°	35°	40°	45°	50°	55°	60°	65°	70°	75°	80°	85°	90°
SEAT UPSTREAM	.95	.91	.84	.81	.78	.80	.77	.74	.74	.73	.70	.66	.63	.60	.57	.53
SEAT DOWNSTREAM	.94	.89	.84	.82	.80	.77	.75	.72	.69	.66	.63	.60	.58	.55	.54	.53

High Performance Butterfly

Ordering Information

VALVE SIZE				VALVE TYPE				MATERIALS OF CONSTRUCTION							FEATURES		
☐	☐	☐	–	☐	☐	☐	–	☐	☐	☐	☐	☐	☐	–	☐	☐	☐
1				2	3	4		5	6	7	8	9	10		11	12	13*

Example: 12 - 1WA - 171MTG - 3: 12" Wafer Style Class 150 Carbon body, Straight 17-4 Ph SS Stem, 316 SS Nitrided Disc, Inconel® Seat, TFE Pkg, Garfil Bearings, Gear Operated

1. Size	Code
2"	02
2 1/2"	025
3"	03
3 1/2"	035
4"	04
to	
48"	48

2. Body Class	Code
150 PSI Max. Diff. Pressure	0
ASME 150	1
ASME 300	3
ASME 600	6

3. Body Type	Code
Wafer	W
Lugged	L
Lugged DDES[2]	D

4. Shaft Design	Code
Straight	A
Class 150 2" - 12"	
Class 150 36" - 48"	
Class 300 2" - 12" & 30"	
Class 600 2" - 8"	
Balanced	C
Class 150 14" - 30"	
Derated 36" - 48" (150 psig max.)	
Class 300 14" - 24"	
Class 600 10" - 16"	

5. Body Material	Code
Carbon Steel	1
316 SS	2
Monel®	3
Alloy 20	4
Annealed AL Br. MIL-B-24480	5
Annealed AL Br. B148 ASTM C958	8
ASTM A744 CN-3MN	A
2205 Duplex ASTM A890 Gr 4A	B
254 SMO	C
Super Duplex ASTM A351 CD4MCu	D
Steel, ASTM A217, Grade C5	E
317 SS	F
Hastelloy C®	H
ASTM A352 LCC	L
304 SS (CF8)	N

FLOWSEAL ACTUATOR OPTIONS:

Lever: Not recommended for Metal Seat High Performance Butterfly Valve

Gear Operators: **Five types available:**
- High temperature service
- Buried service
- Submersible service
- Marine service
- Standard aluminum handwheel

Optional:
- Chain wheel
- Output shaft extension
- Input shaft extension
- Military special operator
- AWWA special operator

Hydraulic Actuator:
Customer specified hydraulic actuator

Pneumatic Actuators:
Crane Revo® spring return pneumatic actuator
Crane Revo® double acting pneumatic actuator
Customer specified pneumatic actuator

Electric Actuators:
Series 44000 electric actuator
Customer specified electric actuator

6. Disc Material	Code
Alum Bronze/ENP B148 C958	0
316 SS	2
Monel®	3
Alloy 20	4
Alum Bronze MIL-B-24480	5
316 SS Nitrided	7
Alum Bronze B148 ASTM C958	8
316 SS/ENP	9
ASTM A744 CN-3MN	A
2205 Duplex ASTM A890 Gr 4A	B
254 SMO	C
Super Duplex ASTM A351 CD4MCu	D
317 SS	F
Hastelloy C®	H
Hastelloy C®/ENP	J
304SS Nitrided (CF8)	L
Monel®/ENP	M
304 SS (CF8)	N

7. Shaft Material	Code
17-4PH SS[1]	1
316 SS	2
Monel®[1]	3
Alloy 20	4
Inconel® 718/750	6
Ferralium A479	7
Nitronic 50	0
AL-6XN	A
2205 Duplex ASTM A890 Gr 4A	B
254 SMO	C
317 SS	F
Hastelloy C®	H

8. Seat Material / O-Ring	Code
TFE / Viton®[4]	T
TFE/ Neoprene	N
RTFE / Silicone[5]	R
RTFE / Viton®[4]	P
RTFE / AFLAS	O
Polyethylene (UHMWPE) / Viton®[4]	L
Fire-Flow (TFE & Metal) / Viton®[4]	F
Fire-Flow (RTFE & Metal)/ Viton®[4]	A
Fire-Flow (RTFE & Metal) / Silicone	B
Inconel®	M
300 SS	S
Fire-Flow (TFE & Monel®) / Viton®[4]	C
Fire-Flow (RTFE & Monel®) / Silicone	J
Fire-Flow (RTFE & Monel®) / Viton®[4]	H
Fire-Flow (TFE & Metal) / Silicone	E
Fire-Flow (TFE & Monel®) / Silicone	V
Fire-Flow (RTFE & Hastelloy C®) / Silicone	K

9. Packing Material	Code
TFE	T
Graphite	G
Fire-Flow	F
Live-Load Packing/TFE	A
Live-Load Packing/Graphite	B
Live-Load Packing/Fire-Flow	C
EF Seal (Viton® O-Rings)/TFE	D

10. Bearing Material	Code
Garfil (Glass Backed TFE)	G
316 SS Backed TFE	H
Fire-Flow (Garfil & 316 SS)	F
Stainless Steel Nitrided	S
Bronze	B
Monel®	K
Hastelloy C® Backed TFE	J

11. Actuator Type	Code
Bare Shaft	B
Worm Gear w/2" Square Nut & Hndwl	D
Ratchet Handle	H
Ratchet Handle w/Lock	L
Throttle	T
Worm Gear	3
Worm Gear (4-way keyed)	9
Pneumatic Double Acting	4
Pneumatic SR Fail Close	5
Pneumatic SR Fail Open	6
Hydraulic	7
Electric	8

12. Special Feature	Code
None	O
Level 2 Commercial Oxygen Cleaning	A
Bi-directional	B
Chlorine Service	C
Dead-end Service (DDES)[2]	D
CE Marked (impact tested)[3]	PI
CE Marked (non-impact tested)[3]	PN
CE Marked (impact tested w/ vacuum service)[3]	VI
CE Marked (non-impact tested w/ vacuum service)[3]	VN
EF Seal (low emissions)	E
EF Seal Vacuum Service (low emissions)	EV
Flat Face	F
Silicone Free	G
Epoxy Coated Body	H
Chainwheel	J
Stem Extension	K
Lockable Gear	L
Limit Switch w/Stainless Steel Bolting	L1
Limit Switch w/Monel® Bolting	L2
Mil-V-24624	M
Gear with Memory Stop	MS
NACE Construction[5]	N
NACE Construction (w/CE marked impact tested)[3,5]	NI
NACE Construction (w/CE marked NON-impact tested)[3,5]	NN
Buried Service	R
60 to 125 AARH Facing	S
Drill Through Lugs	T
Drill Through Lugs and NACE Constr.	TN
Vacuum Service	V

13. Series	Code
*Factory Assigned	J

Note[1] Shaft materials other than 17-4 PH or Monel® will affect working pressure ratings. Please consult factory.
Note[2] DDES = Double Dead End Service.
Note[3] For CE marked valves, see Body Rating chart on page 28, as temp ranges can vary per material.
Note[4] Viton® O-Ring is recommended for use in Hydrocarbon and NACE service.
Note[5] RTFE/Silicone combination is not to be used with "NACE" valves.

Viton® is a registered trademark of DuPont Performance Elastomers L.L.C.
Hastelloy C® is a registered trademark of Haynes International, Inc.
Monel® and Inconel® is a registered trademark of Special Metals Corporation

Valve Torque Tables — Engineering Data

DESCRIPTION OF TORQUE

What is TORQUE?

Torque is any (man or machine) effort which tends to cause rotation or turning. In engineering terms, torque is defined as force acting at some distance from the center of rotation. More correctly: Torque equals force times the perpendicular distan ce from the center of rotation. The perpendicular distance from the center of turning is sometimes called a "moment arm".

Torque is measured in units of distance and force; for example: inch pounds, or foot pounds. The equation for torque is:

$$T = F \times A$$

(Torque equals Force times Moment Arm)

HIGH-PERFORMANCE BUTTERFLY VALVE TORQUE

The High-Performance Butterfly Valve (HPBFV) is a "Quarter-Turn" valve design; that is, it rotates one-quarter of a full 360° turn to move from open to closed or from closed to open.

Seating torque is created by contact between the disc and seat as the disc rotates closed. Unseating torque is created by the disc breaking away from the seat as the disc rotates open. The Flowseal seat creates a seal at no-to-low pressure conditions by means of a mechanical "preload" between the disc and the seat; this pre-loading allows the seat seal to be self-energized. When line pressure is introduced, the Flowseal seat is designed to use the line pressure to create an even tighter seal between the disc and the seal (the higher the pressure, the tighter the seal); this dynamic sealing causes the Flowseal seat to be pressure energized. The valve seating and unseating torque increases as the seat seal moves from the self-energized mode to the pressure-energized mode. (Refer to the valve torque tables for the appropriate torque.)

A difference in torque exists between the seat upstream (SUS) and seat downstream (SDS) positions because of the disc and shaft design. All Flowseal HPBFVs have both off-set discs and eccentric shafts. The off-set is applicable to the disc edge seating surface relative to the shaft center line. By off-setting the seating surface from the rotational center line, a contact with the seat is possible throughout the 360° circumference. The shaft is eccentric in the body by 0.060 ins. and this enhances seat life by imparting a camming action to the disc as it rotates both in and out of the seat. Seat wear points are eliminated at the top and bottom of the disc and operating torque is reduced.

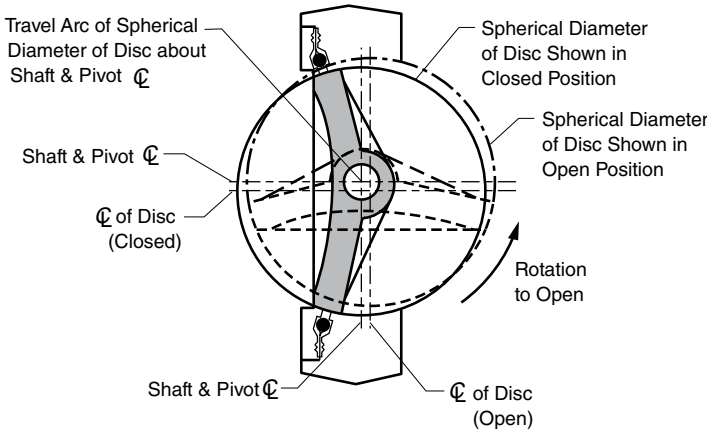

FLOWSEAL HPBFV ECCENTRIC SHAFT DESIGN

In the SUS position (preferred pipeline flow direction), the line pressure tends to assist in opening the valve disc. In the SD S position, the line pressure tends to assist in keeping the valve disc closed; also, line pressure acting on the surface of the disc creates more mechanical pre-load between the disc and seat. Therefore, SDS torque values are higher than SUS values.

ASME Class 150

I. SEATING and UNSEATING TORQUE VALUES

(All Torques are in Inch Pounds)

VALVE SIZE	SOFT SEAT			
	SEAT UPSTREAM (SUS)		SEAT DOWNSTREAM (SDS)	
	0-150 PSIG	285 PSIG	0-150 PSIG	285 PSIG
3"	200	270	200	320
4"	225	470	410	610
6"	540	680	860	1320
8"	910	1620	1620	2580
10"	1620	2530	2630	4550
12"	2530	3600	4160	6350
14"	3720	5970	6200	9000
16"	5530	9180	9000	14700
18"	6840	11900	14500	20100
20"	10020	16970	18000	27200
24"	18330	32290	28100	43000
30"	32330	56930	45500	71800
36"	47000	81000	66000	102000
42"	65000	111000	92000	140000
48"	83000	146000	115000	184000

VALVE SIZE	FIRE-FLOW SEAT			
	SEAT UPSTREAM (SUS)		SEAT DOWNSTREAM (SDS)	
	0-150 PSIG	285 PSIG	0-150 PSIG	285 PSIG
3"	480	540	550	660
4"	645	770	800	1050
6"	1520	1740	2420	3380
8"	2350	2950	4180	4700
10"	4080	5100	6630	9200
12"	5830	7500	9600	13300
14"	9100	11300	15200	17000
16"	11900	16400	19400	26300
18"	17300	22100	36700	37400
20"	23700	34300	42600	55000
24"	36700	59800	56300	79600
30"	61200	89800	86100	113300
36"	C.F.	C.F.	C.F.	C.F.
42"	C.F.	C.F.	C.F.	C.F.

VALVE SIZE	METAL SEAT			
	SEAT UPSTREAM (SUS)		SEAT DOWNSTREAM (SDS)	
	0-150 PSIG	285 PSIG	0-150 PSIG	285 PSIG
3"	900	1250		
4"	1200	1550		
6"	2500	3200		
8"	3800	4700		
10"	6400	8700		
12"	8600	12800	CONSULT FACTORY	CONSULT FACTORY
14"	11200	15100		
16"	17800	24200		
18"	26100	32300		
20"	33500	47600		
24"	53000	71000		
30"	80500	115000		
36"	C.F.	C.F.		
42"	C.F.	C.F.		

Torques shown are for on/off applications and include sizing margins appropriate to normal liquid and gas applications. For severe services, or unusual fluids or slurries, consult factory.

II. HYDRODYNAMIC TORQUE VALUES

The equal percentage flow characteristics of the Flowseal HPBFV makes it well-suited for proportional control applications. Hydrodynamic valve torques develop as a result of the pipeline process conditions (media, velocity, pressure, temperature, and turbulance) and the shape and degree position of the valve disc. Under certain conditions, hydrodynamic torques can meet or exceed seating and unseating torques; when selecting actuators for throttling services, hydrodynamic torque must be considered to help ensure correct selection of actuation.

The chart below provides a C_t(Torque Coefficient) factor to aid in actuator sizing. The C_t factors are based on water at ambient temperature, and do not take into account other factors such as: cavitation, flashing, noise, vibration, etc. These considerations should be addressed prior to hydrodynamic torque sizing.

The equation for hydrodynamic torque is:

$$Td = C_t \times \Delta P$$

ΔP = Pressure Drop in PSIG
C_t = Torque Coefficient Factor
Td = Dynamic Torque in Inch Pounds

VALVE SIZE	10°	20°	30°	40°	50°	60°	70°	80°	90°
	Ct = TORQUE COEFFICIENT FACTORS								
3"	1.23	1.59	2.56	4.00	6.25	9.09	14.29	12.99	15.87
4"	2.38	3.03	4.76	7.69	11.49	16.39	25.00	24.39	32.26
6"	5.00	7.69	14.29	24.39	43.48	71.43	111.11	100.00	125.00
8"	12.99	19.23	31.25	55.56	90.91	158.73	256.41	217.39	238.10
10"	22.73	34.48	55.56	100.00	166.67	277.78	454.55	384.62	416.67
12"	33.33	52.63	100.00	166.67	333.33	467.19	625.00	588.24	625.00
14"	35.71	55.56	90.91	158.73	256.41	454.55	714.29	625.00	769.23
16"	66.67	106.38	185.19	322.58	625.00	613.50	1333.33	1219.51	1351.35
18"	83.33	120.48	208.33	357.14	588.24	1000.00	1538.46	1333.33	1428.57
20"	126.58	196.08	344.83	588.24	1136.36	1724.14	2500.00	2272.73	2439.02
24"	200.00	322.58	588.24	1000.00	1960.78	2702.70	4000.00	3571.43	3846.14
30"	333.33	526.32	1000.00	1694.92	3333.33	4761.90	6666.67	5882.35	6250.00

ASME Class 300

I. SEATING and UNSEATING TORQUE VALUES

(All Torques are in Inch Pounds)

VALVE SIZE	SOFT SEAT											
	SEAT UPSTREAM (SUS)						SEAT DOWNSTREAM (SDS)					
	0-150 psig	285 psig	400 psig	500 psig	600 psig	700 psig	0-150 psig	285 psig	400 psig	500 psig	600 psig	700 psig
3"	220	300	440	520	595	700	220	350	520	600	675	700
4"	250	520	610	670	790	970	460	675	850	1000	1150	1300
6"	600	750	940	1120	1330	1630	950	1450	1750	2100	2300	2750
8"	1000	1800	1950	2440	2810	3390	1800	2850	3400	4000	4500	5250
10"	1800	2790	3840	4640	5370	6510	2900	5000	5700	6700	7600	8750
12"	2790	4000	6140	7480	8590	11390	4600	7000	8000	9500	11000	12850
14"	4130	6640	8630	10200	12100	14940	8200	11500	14500	17000	18000	22000
16"	6140	10200	14000	17070	19640	24440	14000	17000	23500	26500	30000	35100
18"	7600	13220	17100	20400	23990	29460	17500	24000	30000	34000	38000	44500
20"	11140	18860	25010	31530	36310	42990	23500	32000	40000	44500	51500	59400
24"	20370	35870	48260	58820	71330	85080	38000	52000	61500	70000	79500	90000
30"	35920	63260	88430	109620	125290	156780	80000	110000	135000	155000	182000	200000

VALVE SIZE	FIRE-FLOW SEAT											
	SEAT UPSTREAM (SUS)						SEAT DOWNSTREAM (SDS)					
	0-150 psig	285 psig	400 psig	500 psig	600 psig	700 psig	0-150 psig	285 psig	400 psig	500 psig	600 psig	700 psig
3"	550	620	700	750	800	910	688	806	910	975	1040	1183
4"	800	880	1040	1230	1420	1510	1000	1144	1352	1599	1846	1963
6"	1750	2000	2180	2350	2550	3000	2975	3400	3700	4000	4335	5100
8"	2700	3300	3900	4700	5100	5800	4590	5610	6630	8000	8670	9860
10"	4700	5600	6600	7400	8600	9300	7990	9520	11220	12600	14620	15810
12"	6700	8300	10800	12000	14160	17420	11390	14110	18360	20400	24070	29615
14"	9100	11300	13110	17280	20500	25320	14570	19210	22290	29380	34850	43040
16"	11900	16400	22580	27530	31670	39420	20230	27880	38390	46800	53840	67000
18"	17300	22100	28500	34000	40000	49100	29410	37570	48450	57800	68000	83470
20"	23700	34300	45470	57320	66020	78160	40290	58310	77300	97450	112230	132870
24"	36700	59800	80430	98030	118800	141800	55050	83720	112600	137250	166300	198500
30"	61200	89800	126320	156600	179000	224000	91800	125720	176850	219250	250600	313600

VALVE SIZE	METAL SEAT											
	SEAT UPSTREAM (SUS)						SEAT DOWNSTREAM (SDS)					
	0-150 psig	285 psig	400 psig	500 psig	600 psig	700 psig	0-150 psig	285 psig	400 psig	500 psig	600 psig	700 psig
3"	900	1250	1400	1550								
4"	1200	1550	1700	1850								
6"	2800	3400	4300	5700								
8"	4100	5300	6600	8100								
10"	6800	9200	11300	14500								
12"	9100	13500	17400	23600	CONSULT FACTORY		CONSULT FACTORY					
14"	12100	17900	22600	29800								
16"	19100	26700	31400	38800								
18"	28700	37300	46400	53200								
20"	39200	53400	65100	81000								
24"	67000	83200	97600	109200								
30"	112000	131000	164000	193000								

Torques shown are for on/off applications and include sizing margins appropriate to normal liquid and gas applications. For severe services, or unusual fluids or slurries, consult factory.

II. HYDRODYNAMIC TORQUE VALUES

The chart below provides a C_t (Torque Coefficient) factor to aim in actuator sizing. The C_t factors are based on water at ambient temperature, and do not take in to account other factors such as: cavitation, flashing, noise, vibration, etc. These considerations should be ad dressed prior to hydrodynamic torque sizing.

The equation for hydrodynamic torque is:

$$Td = C_t \times \Delta P$$

ΔP = Pressure Drop in PSIG
C_t = Torque Coefficient Factor
Td = Dynamic Torque in Inch Pounds

VALVE SIZE	Disc Position in Degrees Open								
	10°	20°	30°	40°	50°	60°	70°	80°	90°
	Ct = TORQUE COEFFICIENT FACTORS								
3"	0.94	1.23	2.00	3.13	4.76	7.14	10.64	12.99	12.66
4"	1.75	2.22	3.57	5.56	8.33	12.05	18.52	22.73	23.26
6"	3.70	5.88	10.42	17.54	30.30	52.63	78.74	76.92	83.33
8"	9.09	13.70	22.22	38.46	66.67	109.89	185.44	169.49	163.93
10"	15.15	23.26	38.46	66.67	112.36	185.19	303.03	263.16	270.27
12"	23.81	38.46	71.43	117.65	232.56	333.33	454.55	434.78	444.44
14"	33.33	50.00	83.33	144.93	238.10	400.00	625.00	588.24	666.67
16"	62.50	100.00	163.93	277.78	500.00	769.23	1162.79	1098.90	1176.47
18"	66.67	102.04	175.44	285.71	454.78	769.23	1204.82	1190.48	1234.57
20"	102.04	163.93	277.78	476.19	909.09	1315.79	1923.08	1785.71	2040.82
24"	158.73	250.00	454.55	769.23	1369.86	2083.33	3125.00	2777.78	2941.18
30"	357.14	500.00	1010.10	1694.92	3125.00	4545.45	6250.00	5882.35	6060.61

ASME Class 600

I. SEATING and UNSEATING TORQUE VALUES

(All Torques are in Inch Pounds)

SOFT SEAT

SEAT UPSTREAM (SUS)

	0-150 psig	500 psig	800 psig	1000 psig	1200 psig	1480 psig
3"	240	620	720	749	878	1034
4"	341	690	893	1063	1248	1473
6"	710	1330	1861	2215	2601	3065
8"	1423	3079	4498	5444	6476	7714
10"	2371	5469	8124	9894	11825	14142
12"	3795	9357	14124	17302	20758	24929
14"	4860	12312	18699	22957	27600	33176
16"	6820	17278	26241	32216	38732	46558

SOFT SEAT

SEAT DOWNSTREAM (SDS)

	0-150 psig	500 psig	800 psig	1000 psig	1200 psig	1480 psig
3"	290	629	760	943	1061	1250
4"	477	1035	1431	1550	1746	2061
6"	994	2196	2850	3101	3640	4291
8"	1992	4310	6297	7622	9066	10800
10"	3319	7657	11374	13852	16555	19800
12"	5313	13100	19774	24223	29075	34900
14"	6804	17237	26180	32140	38640	46440
16"	9549	24190	36740	45104	54226	65180

Torques shown are for on/off applications and include sizing margins appropriate to normal liquid and gas applications. For severe services, or unusual fluids or slurries, consult factory.

FIRE-FLOW SEAT TORQUES: Consult Factory

METAL SEAT TORQUES: Consult Factory

II. HYDRODYNAMIC TORQUE VALUES: Consult Factory

MATERIAL DESCRIPTIONS:

MATERIAL FORM	DESCRIPTION	GENERIC NAME	SPECIFICATION	GRADE	CONDITIONS /COMMENTS
CASTING	A216 WCB	CARBON STEEL	ASTM A 216	WCB	NORMALIZE & TEMPER
	A351 CF8M	STAINLESS STEEL 316	ASTM A 351	CF8M	SOLUTION ANNEALED
	A351 CN7M	ALLOY 20	ASTM A 351	CN7M	SOLUTION ANNEALED
	A352 LCB	CARBON STEEL TO -50F	ASTM A 352	LCB	QUENCH & TEMPER
	MIL-B-24480	ALUMINUM BRONZE	MIL-B-24480A (SH)	-	ANNEALED
	QQ-N-288	MONEL	QQ-N-288 / AMO 3	COMP. A	ANNEALED
BARSTOCK	NITR 50	NITRONIC 50	ASTM A 479	XM19	-
	A479 316	STAINLESS STEEL 316	ASTM A 479	316	-
	17-4 H1075	17-4PH	ASTM A 564	630	H1075
	17-4 H1150	17-4PH	ASTM A 564	630	H1150
	B473 20CB	ALLOY 20	ASTM B 473	-	-
	QQ-N-281	MONEL	QQ-N-2810 /AMO 2	CLASS A FORM 1	ANNEALED
	INC 718	INCONEL 718	ASTM A 637	718	-
	C.S.	CARBON STEEL	AS AVAILABLE	VARIOUS	LOW C (1018) NON-PRESS. PARTS
	18-8 SS	STAINLESS STEEL	AS AVAILABLE	VARIOUS	300 SERIES (304) NON-PRESS. PARTS
BOLTING	A193-87	ALLOY STEEL	ASTM A 193	B7	-
	A193-B8M	STAINLESS STEEL 316	ASTM A 193	B8M	-
	ALY STL	ALLOY STEEL	SAE	5	BRACKET & ACCESSORY BOLTING
	18-8 SS	STAINLESS STEEL	-	-	300 SERIES STAINLESS STEEL

Body & Components Pressure/Temperature Ratings

BODY RATING

The charts below reflect the pressure/temperature ratings for carbon steel and stainless steel valves, in accordance with ASME B16.34. The hydrostatic shell test is performed on the body at 150% of the cold working pressure (C.W.P. is defined as the pressure rating between -20 to 100°F [-28°C to 37°C]) and the hydrostatic seat test is performed on the disc and seat at 110% of the cold working pressure.

°F	Maximum Non-Shock Working Pressure-PSI								
	Carbon Steel (1)			Carbon Steel (2)			316SS		
ASME Class	150	300	600	150	300	600	150	300	600
HYDROSTATIC SHELL TEST	450	1125	2225	450	1125	2225	425	1100	2175
HYDROSTATIC SEAT TEST	315	815	1630	315	815	1630	305	800	1585
-20 - 32	285	740	1480	-	-	-	275	720	1440
32-100	285	740	1480	285	740	1480	275	720	1440
200	260	675	1350	260	675	1350	240	620	1240
300	230	655	1315	230	655	1315	215	560	1120
400	200	635	1270	200	635	1270	195	515	1030
500	170	600	1200	170	600	1200	170	480	955
600	140	550	1095	140	550	1095	140	450	905
650	125	535	1075	125	535	1075	125	445	890
700	110	535	1065	110	535	1065	110	430	865
750	95	505	1010	95	505	1010	95	425	845
800	80	410	825	80	410	825	80	415	830
850							65	405	810
900							50	395	790
1000							20	365	725

(1) CE impact tested materials and standard non-impact tested materials.
(2) CE non-impact tested materials.

°C	Maximum Non-Shock Working Pressure-Bars								
	Carbon Steel (1)			Carbon Steel (2)			316SS		
ASME Class	150	300	600	150	300	600	150	300	600
HYDROSTATIC SHELL TEST	30	77	153	30	77	153	29	75	150
HYDROSTATIC SEAT TEST	22	56.9	112.4	22	56.9	112.4	20.9	54.6	109.3
-29 to 0	19.6	51.1	102.1	-	-	-	19.0	49.6	99.3
0 to 38	19.6	51.1	102.1	19.6	51.1	102.1	19.0	49.6	99.3
50	19.2	50.1	100.2	19.2	50.1	100.2	18.4	48.1	96.3
100	17.7	46.4	92.8	17.7	46.4	92.8	16.2	42.2	84.4
150	15.8	45.2	90.5	15.8	45.2	90.5	14.8	38.5	77.0
200	14.0	43.8	87.6	14.0	43.8	87.6	13.7	35.7	71.3
250	12.1	41.7	83.4	12.1	41.7	83.4	12.1	33.4	66.8
300	10.2	38.7	77.5	10.2	38.7	77.5	10.2	31.6	63.3
350	8.4	37.0	73.9	8.4	37.0	73.9	8.4	30.4	60.8
400	6.5	34.5	69.0	6.5	34.5	69.0	6.5	29.1	58.2
425	5.6	28.8	57.5	5.6	28.8	57.5	5.6	28.7	57.3
450							4.7	28.1	56.2
500							2.8	26.8	53.7
525							1.9	25.8	51.6

(1) CE impact tested materials and standard non-impact tested materials.
(2) CE non-impact tested materials.

COMPONENTS RATING

The chart at right reflects the maximum temperature ratings for individual components of the Flowseal HPBFV.

Special care should be taken when specifying component materials for valves at elevated temperatures, especially metal seat valves.

Consult factory if additional information is required regarding the suitability of components for specific pressure/temperature applications.

Description & Material	Temperature	
	°F	°C
Seat Seal (Soft Seated)		
TFE	-100 to 400	-73 to 204
RTFE	-100 to 500	-73 to 260
UHMWPE	-100 to 200	-73 to 93
Seat Seal (Fire-Flow)		
TFE/Inconel®	-100 to 400	-73 to 204
RTFE/Inconel®	-100 to 500	-73 to 260
Seat Seal (Metal Seats)		
Inconel® 718	-100 to 1150	-73 to 621
316 Stainless Steel	-100 to 1000	-73 to 538
Seat O-Ring		
Silicone (Standard with RTFE)	-100 to 500	-73 to 260
Viton® (Standard with TFE)	-50 to 400	-46 to 204
Stem Packing		
TFE	-100 to 500	-73 to 260
Graphite	-100 to 1150	-73 to 621
Shaft		
17-4PH H1150	-100 to 800	-73 to 427
17-4PH H1150M	-100 to 800	-73 to 427
316 Stainless Steel	-100 to 1150	-73 to 621
K-Monel® 500	-100 to 1150	-73 to 621
Inconel® 718	-100 to 1150	-73 to 621
Bearings		
TFE/Fiberglass Composite	-100 to 500	-73 to 260
RTFE/316 Stainless Steel	-100 to 500	-73 to 260
Bronze	-100 to 750	-73 to 339
Steel	-100 to 1150	-73 to 621
316 Stainless Steel	-100 to 1000	-73 to 538
Disc Treatment		
Electroless Nickel Plating	-100 to 750	-73 to 399
Stellite	-100 to 1150	-73 to 621
Malcomizing	-100 to 900	-73 to 482

High Performance Butterfly

Valve Mounting Pad Dimensions Engineering Data

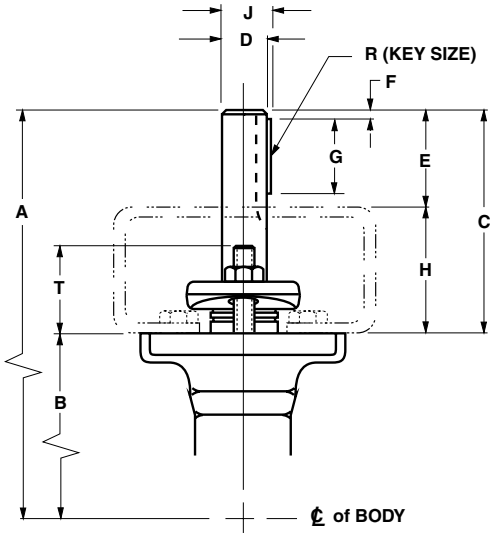

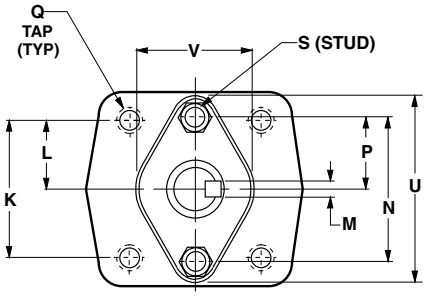

SIZE	CLASS	SERIES	A	B	C	D	E	F	G	H	J	K	L	M	N	P	Q	R	S	T	U	V
2	150	J	7.59	4.25	3.34	.500	1.15	.15	.88	2.19	.576	2.25	1.13	.188	2.38	1.19	3/8-16	3/16 x .88	5/16-18	1.63	3.13	1.38
	300	J	7.59	4.25	3.34	.500	1.15	.15	.88	2.19	.576	2.25	1.13	.188	2.28	1.19	3/8-16	3/16 x .88	5/16-18	1.63	3.13	1.38
2 1/2	150	J	7.59	4.25	3.34	.500	1.15	.15	.88	2.19	.576	2.25	1.13	.188	2.38	1.19	3/8-16	3/16 x .88	5/16-18	1.63	3.13	1.38
	300	J	7.59	4.25	3.34	.500	1.15	.15	.88	2.19	.576	2.25	1.13	.188	2.28	1.19	3/8-16	3/16 x .88	5/16-18	1.63	3.13	1.38
3	150	J	8.60	5.00	3.60	.625	1.41	.15	1.19	2.19	.705	2.25	1.13	.188	2.38	1.19	3/8-16	3/16 x 1.19	5/16-18	1.63	3.13	1.38
	300	J	8.60	5.00	3.60	.625	1.41	.15	1.19	2.19	.705	2.25	1.13	.188	2.38	1.19	3/8-16	3/16 x 1.19	5/16-18	1.63	3.13	1.38
	600	J	8.60	5.00	3.60	.625	1.41	.15	1.19	2.19	.705	2.25	1.13	.188	2.38	1.19	3/8-16	3/16 x 1.19	5/16-18	1.63	3.13	1.38
3 1/2	150	J	8.72	5.12	3.60	.625	1.41	.15	1.19	2.19	.705	2.25	1.13	.188	2.38	1.19	3/8-16	3/16 x 1.19	5/16-18	1.63	3.13	1.38
	300	J	8.72	5.12	3.60	.625	1.41	.15	1.19	2.19	.705	2.25	1.13	.188	2.38	1.19	3/8-16	3/16 x 1.19	5/16-18	1.63	3.13	1.38
4	150	J	9.42	5.75	3.67	.625	1.48	.15	1.19	2.19	.705	2.25	1.13	.188	2.38	1.19	3/8-16	3/16 x 1.19	5/16-18	1.63	3.13	1.38
	300	J	9.42	5.75	3.67	.625	1.48	.15	1.19	2.19	.705	2.25	1.13	.188	2.38	1.19	3/8-16	3/16 x 1.19	5/16-18	1.63	3.13	1.38
	600	J	9.81	6.00	3.81	.750	1.62	.15	1.25	2.19	.854	2.25	1.13	.250	2.38	1.19	3/8-16	1/4 x 1.25	5/16-18	1.88	3.13	1.38
5	150	J	10.28	6.47	3.81	.750	1.62	.15	1.25	2.19	.854	2.25	1.13	.250	2.38	1.19	3/8-16	1/4 x 1.25	5/16-18	1.63	3.13	1.38
	300	J	10.28	6.47	3.81	.750	1.62	.15	1.25	2.19	.854	2.25	1.13	.250	2.38	1.19	3/8-16	1/4 x 1.25	5/16-18	1.63	3.13	1.38
6	150	J	10.81	7.00	3.81	.750	1.62	.15	1.25	2.19	.854	2.25	1.13	.250	2.38	1.19	3/8-16	1/4 x 1.25	5/16-18	1.63	3.13	1.38
	300	J	10.81	7.00	3.81	1.000	1.62	.15	1.25	2.19	1.152	2.25	1.13	.375	2.38	1.19	3/8-16	3/8 x 1.25	5/16-18	1.63	3.13	1.88
	600	J	11.71	7.62	4.09	1.250	1.90	.15	1.50	2.19	1.409	3.25	1.63	.375	3.00	1.50	3/8-16	3/8 x 1.50	3/8-16	1.63	3.88	2.25
8	150	J	11.94	8.13	3.81	1.000	1.62	.15	1.25	2.19	1.152	2.25	1.13	.375	2.38	1.19	3/8-16	3/8 x 1.25	5/16-18	1.63	3.13	1.88
	300	J	12.22	8.13	4.09	1.250	1.90	.15	1.50	2.19	1.409	3.25	1.63	.375	3.00	1.50	3/8-16	3/8 x 1.50	3/8-16	1.88	3.88	2.25
	600	J	13.97	9.13	4.84	1.500	2.65	.15	2.25	2.19	1.663	3.25	1.63	.375	3.00	1.50	3/8-16	3/8 x 2.25	3/8-16	1.88	3.88	2.50
10	150	J	12.97	8.88	4.09	1.250	1.90	.15	1.50	2.19	1.409	3.25	1.63	.375	3.00	1.50	3/8-16	3/8 x 1.50	3/8-16	1.63	3.88	2.50
	300	J	14.22	9.38	4.84	1.500	2.65	.15	2.25	2.19	1.663	3.25	1.63	.375	3.00	1.50	3/8-16	3/8 x 2.25	3/8-16	1.88	3.88	2.50
	600	H	17.90	11.00	6.90	1.750	2.90	.15	2.50	4.00	1.964	4.25	2.13	.500	3.00	1.50	1/2-13	1/2 x 2.50	3/8-16	2.38	3.88	2.50
12	150	J	15.47	10.63	4.84	1.500	2.65	.15	2.25	2.19	1.663	3.25	1.63	.375	3.00	1.50	3/8-16	3/8 x 2.25	3/8-16	1.63	3.88	2.50
	300	J	17.90	11.00	6.90	1.750	2.90	.15	2.50	4.00	1.964	4.25	2.13	.500	3.00	1.50	1/2-13	1/2 x 2.50	3/8-16	1.88	3.88	2.50
	600	H	20.26	12.63	7.63	2.250	3.63	.25	3.00	4.00	2.561	5.00	2.50	.750	4.00	2.00	3/4-10	3/4 x 3.00	1/2-13	2.50	5.00	3.75
14	150	J	16.09	11.25	4.84	1.500	2.65	.15	2.25	2.19	1.663	3.25	1.63	.375	3.00	1.50	3/8-16	3/8 x 2.25	3/8-16	1.88	3.88	2.50
	300	H	19.74	12.38	7.36	2.000	3.35	.15	3.25	4.00	2.218	4.25	2.13	.500	4.00	2.00	1/2-13	1/2 x 3.25	1/2-13	2.50	5.00	3.75
	600	H	22.41	14.53	7.88	2.500	3.88	.25	3.50	4.00	2.820	5.00	2.50	.750	4.00	2.00	3/4-10	3/4 x 3.50	3/4-10	2.50	5.13	3.75
16	150	J	19.59	12.69	8.90	1.750	2.90	.15	2.50	4.00	1.964	4.25	2.13	.500	3.00	1.50	1/2-13	1/2 x 2.50	3/8-16	2.38	3.88	2.50
	300	H	21.82	14.00	7.82	2.250	3.82	.25	3.00	4.00	2.581	5.00	2.50	.750	4.00	2.00	3/4-10	3/4 x 3.00	1/2-13	2.50	5.00	3.75
	600	H	25.38	16.00	9.38	3.000	5.38	.25	5.00	4.00	3.330	5.00	2.50	.750	5.25	2.63	3/4-10	3/4 x 5.00	5/8-11	3.00	6.25	4.88
18	150	J	21.36	14.00	7.36	2.000	3.36	.15	3.25	4.00	2.218	4.25	2.13	.500	4.00	2.00	1/2-13	1/2 x 3.25	1/2-13	2.50	5.00	3.75
	300	H	23.01	15.13	7.86	2.500	3.88	.25	3.25	4.00	2.817	5.00	2.50	.750	4.00	2.00	3/4-10	3/4 x 3.25	1/2-13	2.50	5.00	3.75
20	150	J	22.76	15.13	7.63	2.250	3.63	.25	3.00	4.00	2.561	5.00	2.50	.750	4.00	2.00	3/4-10	3/4 x 3.00	1/2-13	2.50	5.00	3.75
	300	H	25.13	16.36	8.75	3.000	4.75	.25	4.50	4.00	3.327	5.00	2.50	.750	5.25	2.62	3/4-10	3/4 x 4.50	1/2-13	3.00	6.25	4.88
24	150	J	25.13	17.25	7.88	2.500	3.88	.25	3.25	4.00	2.817	5.00	2.50	.750	4.00	2.00	3/4-10	3/4 x 3.25	1/2-13	3.00	5.00	3.75
	300	H	28.01	19.38	8.63	3.500	4.63	.25	4.00	4.00	3.927	7.00	3.50	1.000	5.25	2.62	1" -8	1"x 4.00	1/2-13	3.00	6.25	4.88
30	150	H	29.38	20.63	8.75	3.000	4.75	.25	4.50	4.00	3.327	5.00	2.50	.750	5.25	2.62	3/4-10	3/4 x 4.50	1/2-13	2.50	6.25	4.88
	300	H	32.51	22.88	9.63	4.500	5.63	.25	5.00	4.00	4.944	7.00	3.50	1.000	7.00	3.50	1" -8	1"x 5.00	1/2-13	3.00	8.00	6.75
36	150	H	32.63	24.50	8.13	3.750	4.13	.25	3.50	4.00	4.182	7.00	3.50	1.000	6.00	3.00	1" -8	1"x 3.50	1/2-13	3.00	7.25	5.12
42	150	H	37.63	28.00	9.63	4.500	5.63	.25	5.00	4.00	4.944	7.00	3.50	1.000	7.00	3.50	1" -8	1"x 5.00	1/2-13	3.00	8.00	6.75
48	150	H	41.88	31.25	10.63	5.000	6.63	.25	6.00	4.00	5.546	9.00	4.50	1.250	7.00	3.50	1" -8	1 1/4 x 6.00	1/2-13	3.00	8.00	6.75

Installation Instructions

VALVE DESCRIPTION

1. The Flowseal High Performance Butterfly Valve is available in two body styles: Wafer (flangeless) and Lug (single flange).

VALVE DESIGN

1. The Flowseal High Performance Butterfly Valve features a double offset (or, double eccentric) shaft design to minimize seat abrasion and lower torque. This double offset design allows the disc to lift off and come away from the seat as it rotates open.
2. The Flowseal valve always rotates clockwise to close (when viewed from above) and counterclockwise to open.
3. The valve body has an overtravel stop which prevents the disc from over rotating into the wrong quadrant. This stop is not to be used as a disc position stop; if the disc contacts the overtravel stop, this means it has rotated beyond the seat.
4. The Flowseal valve is bi-directional, but the preferred installation position is with the seat in the upstream position (SUS). Note the arrow on the metal tag attached to the valve body.

SAFETY PRECAUTIONS

1. Be sure the line is depressurized and drained.
2. Be sure of the pipeline media. Proper care should be taken for protection against toxic and/or flammable fluids.
3. Never install the valve without an operator (manual or automatic) already attached to the valve shaft.
4. Never remove the operator from the valve while the valve is in the pipeline under pressure.
5. Always be sure that the disc is in the full-closed position before installing the valve.
6. Take care in handling the valve; if you treat it like a machine, it will operate like a machine...if you treat it like a piece of pipe, it may work like a piece of pipe.

FLANGE COMPATIBILITY

The Flowseal valve is designed to fit between flanges as follows:

ASME Class 150	2" to 24"
MSS SP-44 Class 150	30" to 48"
ASME Class 300	2" to 24"
MSS SP-44 Class 300	30"
ASME Class 600	3" to 14"

GASKET COMPATIBILITY

The Flowseal valve is designed to accomodate the use of standard fiber gaskets (such as non-asbestos, flexible graphite, or equivalent gasket materials) of 1/16" or less, meeting the dimensional requirements of ASME B16.21–1978. Thick elastomeric gaskets are not recommended. Metallic wound (Flexitallic) gaskets may also be used.

Engineering Data

PIPE SCHEDULE COMPATIBILITY

The Flowseal valve is designed to allow the disc edge to rotate into the open position without interference with the pipeline I.D. in the following pipe schedules:

SIZE	ASME 150	ASME 300	ASME 600
2"– 12"	SCH 80	SCH 80	SCH 120
14" – 24"	SCH 40	SCH 80	SCH 120
30"	SCH 30	SCH 80	
36" – 42"	STD WT		
48"	XS		

PRODUCT IDENTIFICATION

1. Every Flowseal valve has a metal identification tag attached to the valve body. Information includes the figure number, the size and pressure class, the materials of construction, and the operating pressures and temperatures.

2. Every Flowseal valve is hydrostatically tested before it is shipped. The metal tag also includes a serial number; this number, unique for each valve, is recorded by the Flowseal Quality Control Department along with the test results and material certification data, for individual traceability and verification of every valve produced.

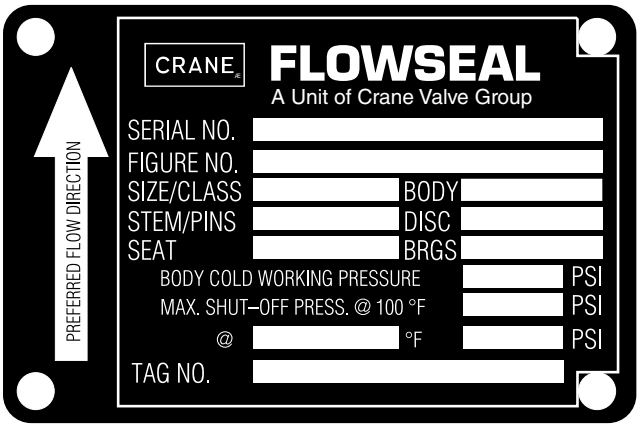

UNPACKING AND STORAGE INSTRUCTIONS

1. Check the packing list against the valve received to verify that the quantities, sizes and materials are correct.
2. Check to make sure that the valve and operator were not damaged during shipment.
3. If the valve is to be stored before being installed, it should be protected from harsh environmental conditions.
4. Store the valve with the disc in the closed position to protect the sealing edge and the seat.
5. Keep the valve in a clean location, away from dirt, debris and corrosive materials.
6. Keep the valve in a dry area with the flange protectors attached.
7. Keep the valve in a cool location if possible, out of direct sunlight.

BOLTING DIMENSIONS

LUG BODY

HEX HEAD MACHINE BOLTS

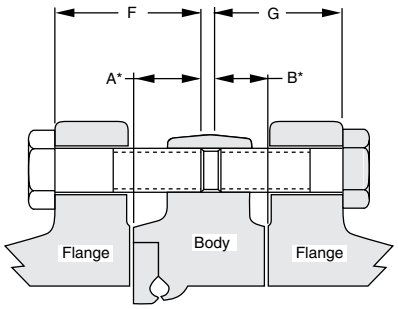

LUG BODY

STUDS & NUTS

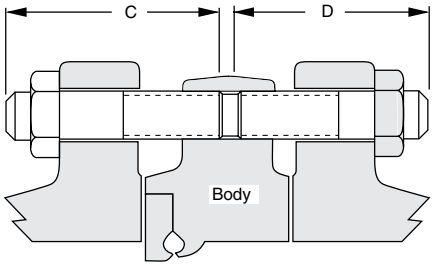

WAFER BODY

STUDS & NUTS

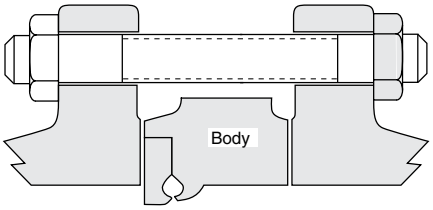

ASME Class 150 2" – 24"
MSS SP-44 Class 150 30" – 48"

			LUG VALVES												WAFER VALVES	
			BOLT ENGAGEMENT IN VALVE*				STUDS & NUTS				MACHINE BOLTS				STUDS & NUTS	
VALVE SIZE	VALVE SERIES	THREAD SIZE	QTY	LG	QTY	LG	QTY	LG	QTY	LG	QTY	LG	QTY	LG	QTY	LG
			A	A	B	B	C	C	D	D	F	F	G	G	E	E
2"	J	5/8-11	4	.940	4	.570	4	2.50	4	2.12	4	1.75	4	1.50	4	5.00
2 1/2"	J	5/8-11	4	.960	4	.680	4	2.62	4	2.38	4	2.00	4	1.62	4	5.25
3"	J	5/8-11	4	1.139	4	.725	4	3.00	4	3.00	4	1.88	4	1.62	4	6.00
4"	J	5/8-11	8	1.071	8	.745	8	3.00	8	3.00	8	2.00	8	1.62	8	6.00
5"	J	3/4-10	8	1.220	8	.790	8	3.12	8	2.62	8	2.25	8	1.75	8	6.00
6"	J	3/4-10	8	1.401	8	.839	8	3.50	8	2.75	8	2.38	8	1.75	8	6.50
8"	J	3/4-10	8	1.492	8	.948	8	3.75	8	3.00	8	2.50	8	2.00	8	6.50
10"	J	7/8-9	12	1.752	12	1.000	12	4.50	12	3.25	12	2.62	12	2.38	12	7.50
12"	J	7/8-9	12	2.147	12	1.025	12	4.50	12	3.25	12	3.38	12	2.25	12	8.00
14"	J	1-8	12	2.330	12	1.210	12	5.00	12	3.75	12	3.62	12	2.62	12	9.00
16"	J	1-8	16	2.648	16	1.270	16	5.25	16	4.00	16	4.00	16	2.62	16	10.00
18"	J	1 1/8-8	16	2.723	16	1.645	16	5.50	16	4.50	16	4.25	16	3.12	16	10.50
20"	J	1 1/8-8	16	3.396	20	1.434	16	6.25	20	4.50	16	5.12	20	3.19	16	11.00
	J	1 1/8-8	4**	2.325	–	–	4**	5.25	–	–	4**	4.06	–	–	8**	5.25
24"	J	1 1/4-8	20	3.690	20	2.250	20	6.75	20	5.25	20	5.50	20	4.12	20	12.50
30"	H	1 1/4-8	24	3.471	24	3.159	24	7.75	24	7.50	24	6.47	24	6.15	24	15.25
	H	1 1/4-8	4**	1.908	4**	1.592	4**	6.00	4**	5.75	4**	4.91	4**	4.59	8**	6.00
36"	H	1 1/2-8	28	3.760	28	3.740	28	9.00	28	9.00	28	7.19	28	7.19	28	18.25
	H	1 1/2-8	4**	1.760	4**	1.740	4**	6.75	4**	6.75	4**	5.25	4**	5.25	8**	6.75
42"	H	1 1/2-8	32	4.160	32	4.090	32	9.75	32	9.50	32	6.62	32	4.25	32	19.25
	H	1 1/2-8	4**	1.782	4**	1.718	4**	7.25	4**	7.25	4**	4.25	4**	4.25	8**	7.25
48"	H	1 1/2-8	40	5.520	40	4.850	40	11.75	40	11.00	40	9.83	40	9.16	40	21.00
	H	1 1/2-8	4**	2.815	4**	2.190	4**	7.75	4**	7.75	4**	7.12	4**	6.50	8**	7.75

Length of machine bolts based on:
1. Gasket thickness of 0.06 inches.
2. Minimum flange thickness of weld neck flanges per ASME B16.5.

Every effort is made to provide accurate information, but no liability for claims arising from erroneous data will be accepted by Flowseal.

BOLTING DIMENSIONS

ASME Class 300 2" – 24"
MSS SP-44 Class 300 30"

			LUG VALVES												WAFER VALVES	
			BOLT ENGAGEMENT IN VALVE*				STUDS & NUTS				MACHINE BOLTS				STUDS & NUTS	
VALVE SIZE	VALVE SERIES	THREAD SIZE	QTY	LENGTH	QTY	LENGTH	QTY	LENGTH	QTY	LENGTH	QTY	LENGTH	QTY	LENGTH	QTY	LENGTH
			A	A	B	B	C	C	D	D	F	F	G	G	E	E
2"	J	5/8-11	8	.940	8	.570	8	2.25	8	2.62	8	1.50	8	2.00	8	5.25
2 1/2"	J	5/8-11	8	.970	8	.670	8	2.75	8	3.00	8	1.75	8	2.00	8	5.75
3"	J	3/4-10	8	1.034	8	.826	8	3.00	8	3.00	8	2.12	8	.75	8	6.00
4"	J	3/4-10	8	1.196	8	.870	8	3.50	8	3.25	8	2.50	8	2.00	8	6.50
5"	J	3/4-10	8	1.220	8	.790	8	5.25	8	3.62	8	2.25	8	2.75	8	7.00
6"	J	3/4-10	12	1.301	12	.929	12	3.75	12	3.50	12	2.75	12	2.25	12	7.00
8"	J	7/8-9	12	1.702	12	1.128	12	4.50	12	4.00	12	3.25	12	2.75	12	8.25
10"	J	1-8	16	1.867	16	1.300	16	5.00	16	4.50	16	3.25	16	3.12	14	9.25
	J	1-8	–	–	–	–	–	–	–	–	–	–	–	–	4**	5.00
12"	J	1 1/8-8	16	2.057	16	1.475	16	5.50	16	5.00	16	4.00	16	3.38	12	10.00
	J	1 1/8-8	–	–	–	–	–	–	–	–	–	–	–	–	8**	5.25
14"	H	1 1/8-8	16	2.442	16	2.118	16	6.00	16	5.75	16	4.62	16	4.25	16	11.50
	H	1 1/8-8	4**	1.608	4**	1.267	4**	5.25	4**	4.75	4**	3.75	4**	3.44	8**	5.25
16"	H	1 1/4-8	16	2.562	16	2.628	16	6.50	16	6.50	16	4.88	16	4.88	16	13.00
	H	1 1/4-8	4**	1.538	4**	1.588	4**	5.25	4**	5.25	4**	3.88	4**	4.25	8**	5.25
18"	H	1 1/4-8	20	2.870	20	2.890	20	7.00	20	7.00	20	5.25	20	5.25	20	14.00
	H	1 1/4-8	4**	1.657	4**	1.437	4**	5.50	4**	5.50	4**	4.00	4**	3.88	8**	5.50
20"	H	1 1/4-8	20	3.184	20	3.006	20	7.50	20	7.25	20	5.69	20	5.69	20	14.50
	H	1 1/4-8	4**	1.681	4**	1.750	4**	5.75	4**	5.50	4**	4.19	4**	4.00	8**	5.75
24"	H	1 1/2-8	20	3.560	20	3.510	20	8.25	20	8.25	20	6.31	20	6.25	20	16.50
	H	1 1/2-8	4**	1.800	4**	1.750	4**	6.25	4**	6.25	4**	4.56	4**	4.50	8**	6.25
30"	H	1 3/4-8	24	4.331	24	4.429	24	10.25	24	10.50	24	7.88	24	7.88	24	20.50
	H	1 3/4-8	4**	2.039	4**	2.071	4**	8.00	4**	8.00	4**	5.44	4**	5.47	8**	8.00

ASME Class 600 3" – 14"

			LUG VALVES												WAFER VALVES	
			BOLT ENGAGEMENT IN VALVE*				STUDS & NUTS				MACHINE BOLTS				STUDS & NUTS	
VALVE SIZE	VALVE SERIES	THREAD SIZE	QTY	LENGTH	QTY	LENGTH	QTY	LENGTH	QTY	LENGTH	QTY	LENGTH	QTY	LENGTH	QTY	LENGTH
			A	A	B	B	C	C	D	D	F	F	G	G	E	E
3"	J	3/4-10	8	1.034	8	1.026	8	3.50	8	3.50	8	2.25	8	2.38	8	7.00
4"	J	7/8-9	8	1.274	8	1.165	8	3.50	8	3.25	8	2.75	8	2.75	8	7.75
6"	J	1-8	12	1.274	12	1.306	12	4.75	12	4.75	12	3.25	12	3.25	12	9.50
8"	J	1 1/8-8	12	1.794	12	1.795	12	5.75	12	5.75	12	4.12	12	4.12	12	11.50
10"	H	1 1/4-8	12	2.495	12	2.000	12	6.75	12	6.25	12	5.00	12	4.50	12	13.00
	H	1 1/4-8	4**	1.375	4**	2.000	4**	5.50	4**	6.25	4**	3.88	4**	4.50	8**	6.25
12"	H	1 1/4-8	16	2.683	16	2.697	16	7.00	16	7.00	16	5.38	16	5.38	16	14.00
	H	1 1/4-8	4**	1.325	4**	1.765	4**	5.25	4**	6.00	4**	4.00	4**	4.38	8**	6.00
14"	H	1 3/8-8	16	2.994	16	2.996	16	7.50	16	7.50	16	CF	16	CF	16	15.00
	H	1 3/8-8	4**	1.506	4**	1.869	4**	6.00	4**	6.50	4**	CF	4**	CF	8**	6.50

* Bolt lengths "A" & "B" are from face of valve body to minimum depth in lug. Flange & gasket thickness must be added to calculate minimum bolt length.

** Special length required for tapped blind holes on either side of the valve shaft at the top and bottom ends of the valve body.

PRE – INSTALLATION PROCEDURE

1. Remove the protective face covers from the valve.
2. Inspect the valve to be certain the waterway is free from dirt and foreign matter. Be certain the adjoining pipeline is free from any foreign material such as rust and pipe scale or welding slag that could damage the seat and disc sealing surfaces.
3. Actuators should be mounted on the valve prior to installation to facilitate proper alignment of the disc in the valve seat.
4. The valve should be in the **closed position**. Make sure the open and closed positions of the actuator correspond to the counter-clockwise to open direction of rotation of the valve.
5. Cycle the valve to the fully open position, then back to the fully closed position, checking the actuator travel stop settings for proper disc alignment.
6. Check the valve identification tag for valve class, materials, and operating pressure to be sure they are correct for the application.

WARNING! ⚠ Personal injury or property damage may result if the valve is installed where service conditions could exceed the valve ratings.

7. Check the flange bolts or studs on both sides of the valve for proper size, threading, and length.

VALVE INSTALLATION PROCEDURE

The Flowseal High Performance Butterfly Valve can be installed in the pipeline with the shaft in the vertical, horizontal, or other intermediate position. Based on applications experience, however, in media with concentrations of solid or abrasive particles or media subject to solidification buildup, valve performance and service life will be enhanced by mounting the valve with the shaft in the horizontal position.

All Flowseal valves are bi-directional (in some instances, modifications may be required to operate this arrangement for dead end service) and can be mounted in the pipeline in either flow direction; however, the preferred flow direction for all seat styles and materials is with the seat retainer ring located upstream (sus) to provide maximum seat protection.

1. For Wafer style (flangeless) valves:
   a. Loosely install the lower flange bolts to form a cradle between the flanges. See Figure 1.
   b. Noting the flow direction arrow on the tag, place the valve and flange gaskets between the flanges, making sure the arrow on the tag points in the direction of the flow.
   c. Install the remaining flange bolts, shifting the valve as necessary to permit the bolts to pass by or through the valve body.
2. For Lug style (single flange) valves:
   a. Noting the flow direction arrow on the tag, place the valve between the flanges, making sure the arrow on the tag points in the direction of the flow.
   b. Install the lower flange bolts loosely, leaving space for the flange gaskets.
   c. After inserting the flange gaskets, install the remaining bolts.
3. Using the sequence shown in Figure 2, tighten the flange bolts evenly to assure uniform gasket compression.

Caution: The Flowseal valve should be centered between the flanges and gaskets to prevent damage to the disc edge and shaft as a result of the disc striking the flange, gasket, or pipe.

4. If an actuator is to be used, air hoses or electricity should be connected to the unit as specified by the actuator manufacturer.
5. The valve is now ready for operation.

***Remember:* Install the valve with the disc in the full-closed position!**

Figure 1

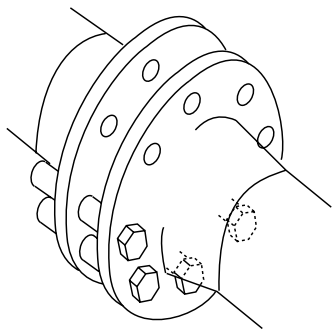

Figure 2

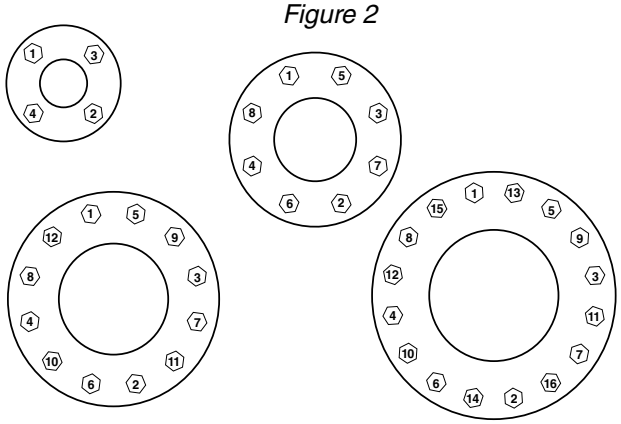

Typical Specifications

TYPICAL SOFT SEAT SPECIFICATION

1.0 Scope
This specification covers the design and testing of high pressure offset seat butterfly valves.

2.0 Applicable Standards
The following standards shall apply

ASME B16.5:	Pipe Flanges and Flanged Fittings (24" size and smaller).
ASME B16.34:	Valves–Flanged and Buttwelding End.
MSS SP-25:	Standard Marking System for Valves, Fittings, Flanges and Unions.
MSS SP-61:	Pressure Testing of Steel Valves.
MSS SP-68:	High Pressure–Offset Seat Butterfly Valves.
API 609:	Butterfly Valves, Lug-Type and Wafer-Type.
PED	Pressure Equipment Directive Section H

3.0 Design Requirement
3.1 Valves shall be High Performance Butterfly with offset seat and eccentric shaft. They shall be capable of sealing against full differential pressure in either flow direction.
3.2 Valve seat shall be both self and pressure energized with an elastomeric core. The self energizing member shall be isolated from the line media.
3.3 Valves shall have retained top and bottom low friction bearings.
3.4 Shaft design shall be single or dual piece.
3.5 Retainer rings must be recessed in the body so that the line gasket prevents any potential external leakage.
3.6 Valves shall have internal stop to prevent disc over-travel.
3.7 Valves shall be Flowseal or approved equal.

4.0 Materials
4.1 Valves shall be constructed of new material.
4.2 Carbon steel valves shall be constructed from materials below:
4.2.1 Body–ASTM A105 or A216 Gr. WCB.
4.2.2 Disc–ASTM A182 F316 or A351 Gr. CF8M.
4.3 Stainless steel valves shall be constructed from materials below:
4.3.1 Body–ASTM A182 Gr. F316 or A351 Gr. CF8M.
4.3.2 Disc–ASTM A182 Gr. F316 or A351 Gr. CF8M.
4.4 Shafts shall be ASTM A564 type 630 H 1150 or 316 SS.

5.0 Inspection and Test
5.1 Valves shall be hydrostatically shell tested per ASME B16.34 and MSS SP-61.
5.2 Valves shall be seat tested per MSS SP-61. No leakage is permitted for resilient seated valves.
5.3 API 598 testing available upon request.

Sample Figure Number
12 – 1WA – 121TTG – 30J

TYPICAL METAL SEAT SPECIFICATION

1.0 Scope
This specification covers the design and testing of high pressure offset seat butterfly valves.

2.0 Applicable Standards
The following standards shall apply

ASME B16.5:	Pipe Flanges and Flanged Fittings (24" size and smaller).
ASME B16.34:	Valves–Flanged and Buttwelding End.
MSS SP-25:	Standard Marking System for Valves, Fittings, Flanges and Unions.
ASME/FCI 70-2:	Control Valve Seat Leakage
MSS SP-68:	High Pressure–Offset Seat Butterfly Valves.
API 609:	Butterfly Valves, Lug-Type and Wafer-Type.
PED	Pressure Equipment Directive Section H

3.0 Design Requirement
3.1 Valves shall be High Performance Butterfly with offset seat and eccentric shaft. They shall be capable of Class IV sealing in either flow direction.
3.2 Valve seat shall be both self and pressure energized.
3.3 Valves shall have retained top and bottom bearings.
3.4 Shaft design shall be single or dual piece.
3.5 Retainer rings must be recessed in the body so that the line gasket prevents any potential external leakage.
3.6 Valves shall have internal stop to prevent disc over-travel.
3.7 Valves shall be Flowseal or approved equal.

4.0 Materials
4.1 Valves shall be constructed of new material.
4.2 Carbon steel valves shall be constructed from materials below:
4.2.1 Body–ASTM A105 or A216 Gr. WCB.
4.2.2 Disc–ASTM A182 F316 or A351 Gr. CF8M.
4.3 Stainless steel valves shall be constructed from materials below:
4.3.1 Body–ASTM A182 Gr. F316 or A351 Gr. CF8M.
4.3.2 Disc–ASTM A182 Gr. F316 or A351 Gr. CF8M.
4.4 Shafts shall be ASTM A564 type 630 H 1150, or 316 SS.

5.0 Inspection and Test
5.1 Valves shall be hydrostatically shell tested per ASME B16.34 and MSS SP-61.
5.2 Valves shall be seat tested per ASME/FCI 70–2, Class IV.

Sample Figure Number
12 – 1WA – 171MTG – 30J

TYPICAL FIRE FLOW SPECIFICATION

1.0 Scope
This specification covers the design and testing of high pressure offset seat butterfly valves.

2.0 Applicable Standards
The following standards shall apply

ASME B16.5:	Pipe Flanges and Flanged Fittings (24" size and smaller).
ASME B16.34:	Valves–Flanged and Buttwelding End.
MSS SP-25:	Standard Marking System for Valves, Fittings, Flanges and Unions.
MSS SP-61:	Pressure Testing of Steel Valves.
MSS SP-68:	High Pressure–Offset Seat Butterfly Valves.
API 609:	Butterfly Valves, Lug-Type and Wafer-Type.
API 607:	Fire Test for Soft-Seated Quarter Turn Valves.
PED	Pressure Equipment Directive Section H

3.0 Design Requirement
3.1 Valves shall be High Performance Butterfly with offset seat and eccentric shaft. They shall be capable of sealing against full differential pressure in either flow direction.
3.2 Valve seat shall be both self and pressure energized with an elastomeric core. The self energizing member shall be isolated from the line media.
3.3 Valves shall have retained top and bottom low friction bearings.
3.4 Shaft design shall be single or dual piece.
3.5 Retainer rings must be recessed in the body so that the line gasket prevents any potential external leakage.
3.6 Valves shall have internal stop to prevent disc over-travel.
3.7 Valves shall be Flowseal or approved equal.

4.0 Materials
4.1 Valves shall be constructed of new material.
4.2 Carbon steel valves shall be constructed from materials below:
4.2.1 Body–ASTM A105 or A216 Gr. WCB.
4.2.2 Disc–ASTM A182 F316 or A351 Gr. CF8M.
4.3 Stainless steel valves shall be constructed from materials below:
4.3.1 Body–ASTM A182 Gr. F316 or A351 Gr. CF8M.
4.3.2 Disc–ASTM A182 Gr. F316 or A351 Gr. CF8M.

5.0 Inspection and Test
5.1 Valves shall be hydrostatically shell tested per ASME B16.34 and MSS SP-61.
5.2 Valves shall be seat tested per MSS SP-61. No leakage is permitted for resilient seated valves.
5.3 API 598 testing available upon request.
5.4 Flowseal Fire-Flow™ valves qualified to API 607 fire test standard.

Sample Figure Number
12 – 1WA – 191FFF – B0J

Actuators

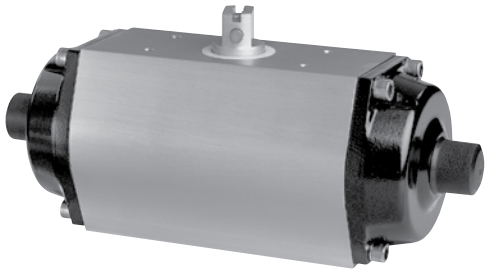

ELECTRIC–ON-OFF

Standard Features:
Torque Range– 347 lb ins to 17,359 lb ins
Housing – NEMA4 & 4X
Electric Motor –120VAC, 1 PHASE, 60Hz
Thermal Overload – Auto re-set
Limit Switches– Adjustable cam operated
Position Indicator – Mechanical Dial Type
Space Heater – Located in the control compartment
Terminal Strip – Pre-wired for motor & limit switches
Manual Override – Directing acting
Brake – "Lock-cut" gear arrangement
Adjustable Mechanical Travel Stops
Temperature Range – -13°F to 131°F (-25°C to 55°C)
Mounting – Direct mount to Center Line valves
Certification/Approvals – CSA-NRTL/C

Optional Features:
AC Voltages – 220VAC, 1 PHASE, 60 Hz
AC Voltages – 24 VAC 44005-44400
DC Voltages – 12/24 VDC 4005-44300
Additional Limit Switches – 2 SPDT
Torque Switches – Adjustable open and close
Feedback Potentiometer – 500 ohm
Feedback Transmitter–4-20 mA
De-clutchable Handwheel Override

ELECTRIC–MODULATING

Standard Features:
Process Control Signal–4-20 mA, 0-10 V DC
Torque Range – 347 lb ins to 17,359 lb ins
Housing – NEMA4 & 4X
Electric Motor –120VAC, 1 PHASE, 60 Hz
Thermal Overload – Auto re-set
Resolution – 400 increments through 90 degrees
Position Indicator – Mechanical Dial Type
Space Heater–Located in the control compartment
Terminal Strip – Pre-wired for motor & limit switches
Manual Override– Directing acting
Brake – "Lock-cut" gear arrangement
Adjustable Mechanical Travel Stops
Temperature Range – -13°F to 131°F (-25°C to 55°C)
Mounting – Direct mount to Center Line valves
Certification/Approvals – CSA-NRTL/C

Optional Features
AC Voltages – 220VAC, 1 PHASE, 60 Hz
AC Voltages – 24 VAC 44010M - 44200M
Torque Switches– Adjustable open and close
De-clutchable Handwheel Override

PNEUMATIC–DOUBLE ACTING

Standard Features:
Torque Range – 80 lb ins to 60,623 lb ins
Housing – Castalloy aluminum, polyurethane coated
Mounting – ISO5211
Top and Solenoid Mounting Pad – NAMUR
Position Indicator – Mechanical "Cap" Type
Operating Pressure – 20 to 120 PSIG
Temperature Range – 4°F to 175°F (-15°C to 79°C)
Size Range – 12 models to choose from
Adjustable Travel Stops – Both directions
Mounting – Direct mount to Center Line valves

Optional Features:
Temperature Range – 4°F to 250°F, -40°F to 175°F (-15°C to 121°C, -40°C to 79°C)
Solenoid Valves – 3 or 4 way
Limit Switches – Adjustable cam operated
Positioners – Pneumatic or Electro-pneumatic
DC-1 Dribble Control – Two-stage shutoff
180° Actuation – 2 or 3 position
Manual Override – De-clutchable gear type
Speed Controls – Adjust cycle time
Special Applications – Offshore, nuclear, hygienic, and gas or oil operation

PNEUMATIC–SPRING RETURN

Standard Features:
Torque Range – 80 lb ins to 41,341 lb ins
Housing – Castalloy aluminum, polyurethane coated
Mounting – ISO5211
Top and Solenoid Mounting Pad – NAMUR
Position Indicator – Mechanical "Cap" Type
Operating Pressure – 20 to 120 PSIG
Temperature Range – 4°F to 175°F (-15°C to 79°C)
Size Range – 12 models to choose from
Adjustable Travel Stops – Both directions
Mounting – Direct mount to Center Line valves

Optional Features
Temperature Range – 4°F to 250°F, -40°F to 175°F (-15°C to 121°C, -40°C to 79°C)
Solenoid Valves – 3 or 4 way
Limit Switches– Adjustable cam operated
Positioners – Pneumatic or Electro-pneumatic
DC-1 Dribble Control – Two-stage shutoff
180° Actuation – 2 or 3 position
Manual Override – De-clutchable gear type
Speed Controls – Adjust cycle time
Special Applications – Offshore, nuclear, hygienic, and gas or oil operation

CRANE

Energy Flow Solutions

Global Headquarters
19241 David Memorial Drive, Suite 150
Shenandoah, Texas 77385
Tel: 936-271-6500
Fax: 936-271-6510

Conroe, TX, Operations
9860 Johnson Road
Montgomery, TX 77316
Tel: 936-588-8380
Fax: 936-588-8381

Sydney, Australia, Operations
146–154 Dunheved Circuit
St. Mary's, N.S.W. 2760 Australia
Tel: + 61 (2) 9623 0234
Fax: + 61 (2) 9673 3870

Düsseldorf, GmbH, Operations
Crane Process Flow Technology, GmbH
Heerdter Lohweg 63-71, D-40549
Düsseldorf, Germany
Tel: +49 211 59 56 0
Fax: +49 211 59 56-111

www.craneenergy.com

CRANE Energy Flow Solutions®

brands you know...**technology** you want...**solutions** you need

ALOYCO®

Ball, Check, Corrosion Resistant Gate and Globe Valves

KROMBACH ARMATUREN

Valve System Solutions, Highly Engineered Specialty Valves

CENTER LINE

Lined Check and Resilient Seated Butterfly Valves

NOZ-CHEK® COMPAC-NOZ®

Nozzle-Type, Severe Service Check Valves

CRANE

Ball, Bronze, Butterfly, Cast Steel, and Iron Valves

PACIFIC VALVES

High Pressure and Severe Service Valves

DUO-CHEK® UNI-CHEK®

High Performance Wafer Check Valves

STOCKHAM®

Ball, Bronze, Butterfly, Cast Steel, and Iron Valves

FLOWSEAL

High Performance Butterfly and Metal Seated Valves

Triangle

Cast Steel Valves

SINCE 1864 JENKINS

Ball, Bronze, Butterfly, Cast Steel, and Iron Valves

VALVE SERVICES

Certified Valve Repair Services

Aloyco, Center Line, Compac-Noz, Crane, Duo-Chek, Flowseal, Jenkins, Krombach, Noz-Chek, Pacific, Stockham, Triangle, and Uni-Chek are all trademarks of Crane Co. ©2010

EG-FL-CT-EN-L11-06-1002 (CV-501)